PARTS

Table of Contents

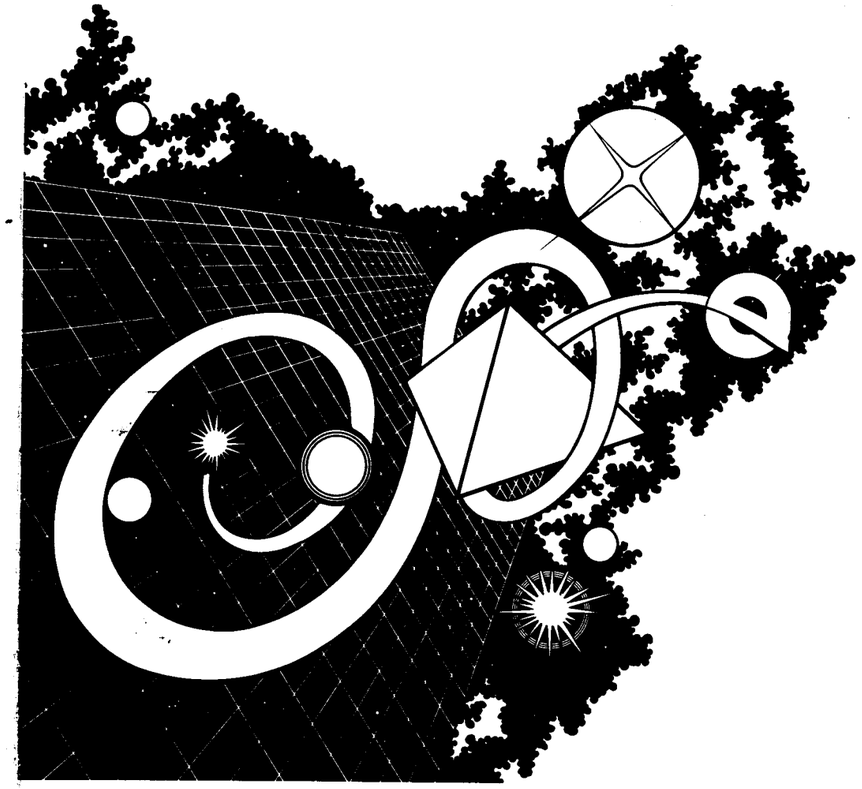

NOTE
This staple temporarily holds the schematic package together. Remove the staple before using these schematics.

Schematic Package Supplement to

Quantum

Operation, Maintenance, and Service Manual

12L

SP-221 Sheet 1A
1st printing

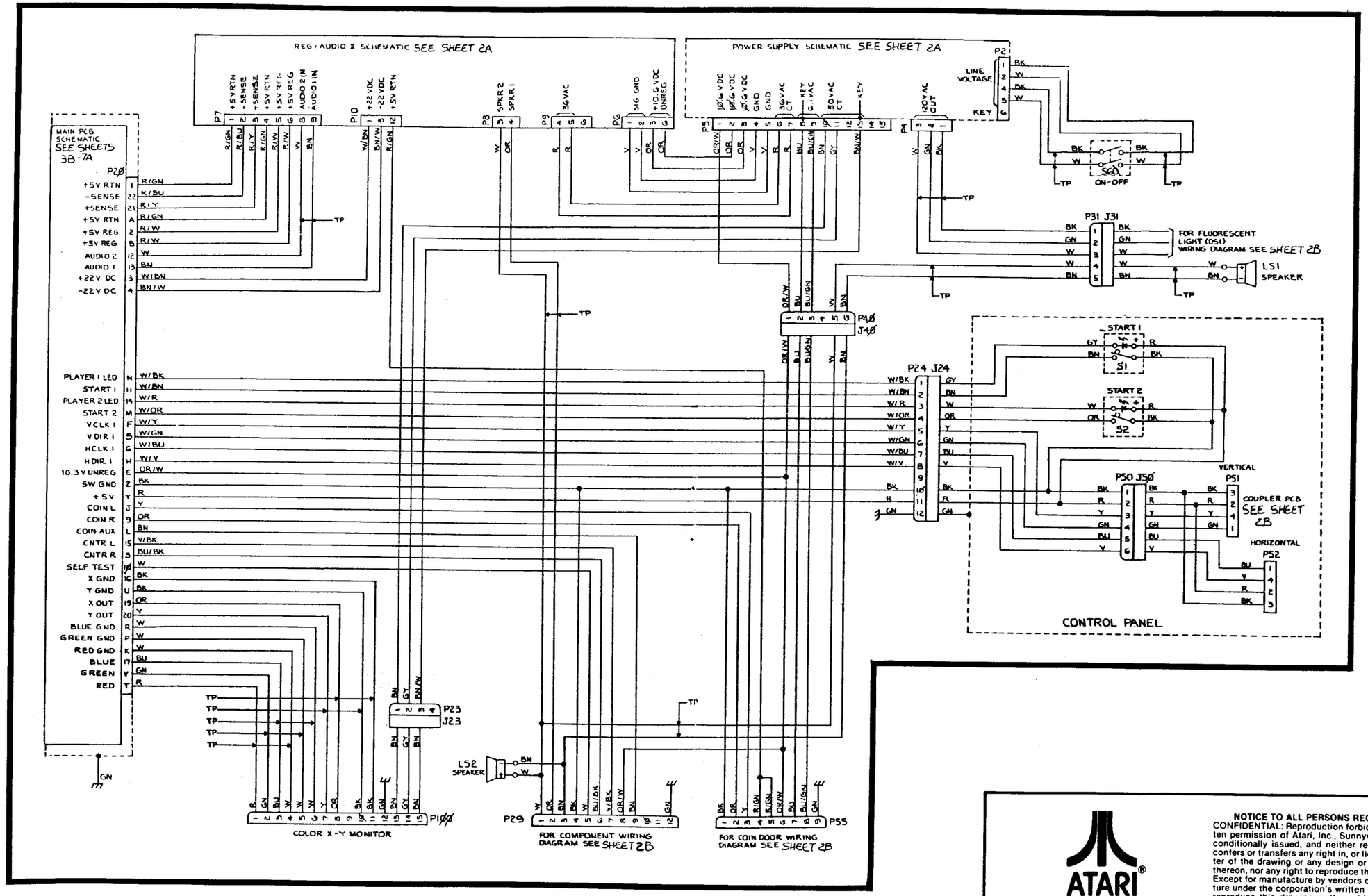

ATARI®

Quantum™ Main Wiring Diagram

A Warner Communications Company

SP-221 Sheet 1B
1st Printing

Regulator/Audio II PCB Schematic Diagram

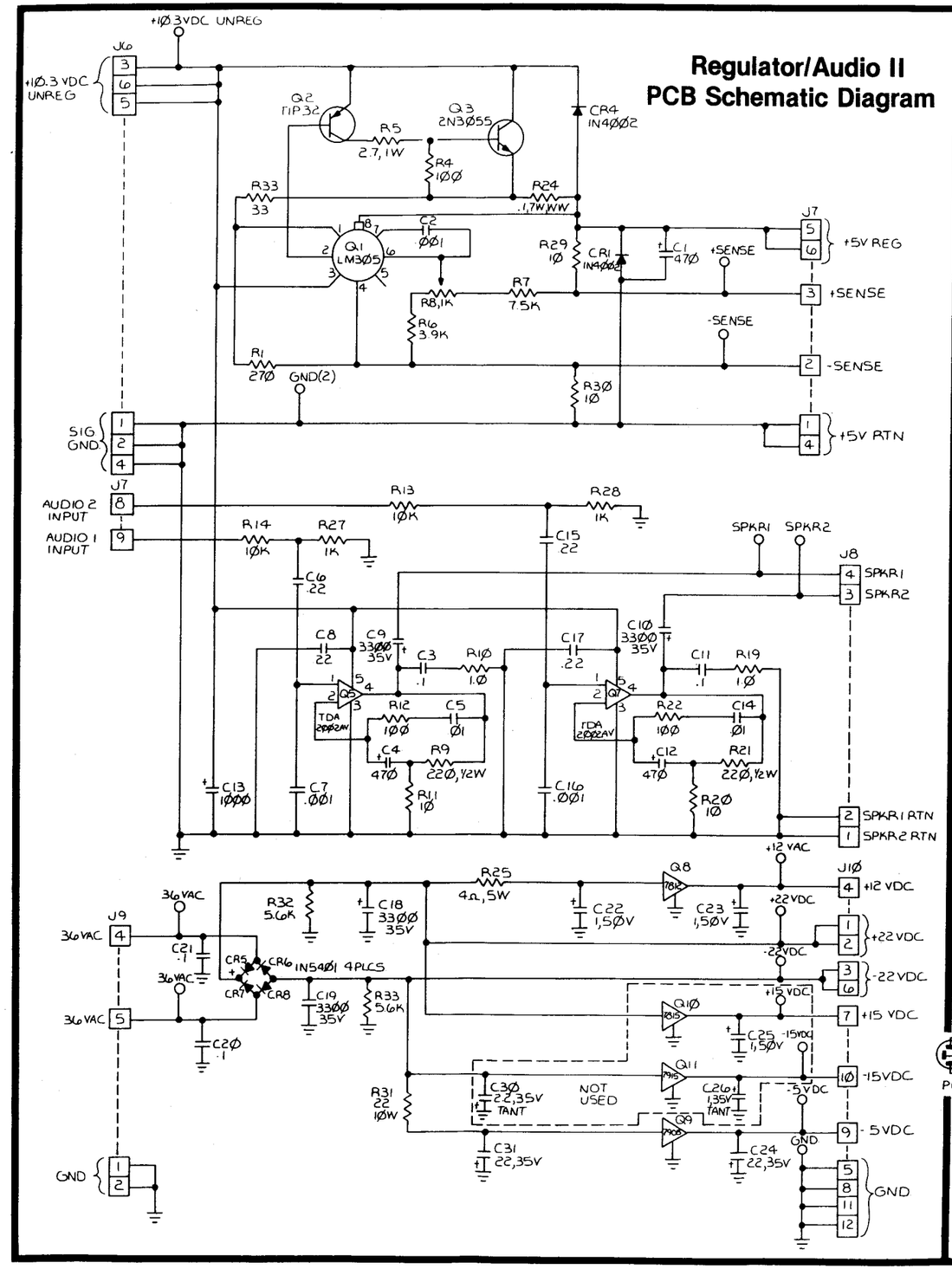

Color X-Y Power Supply Wiring Diagram

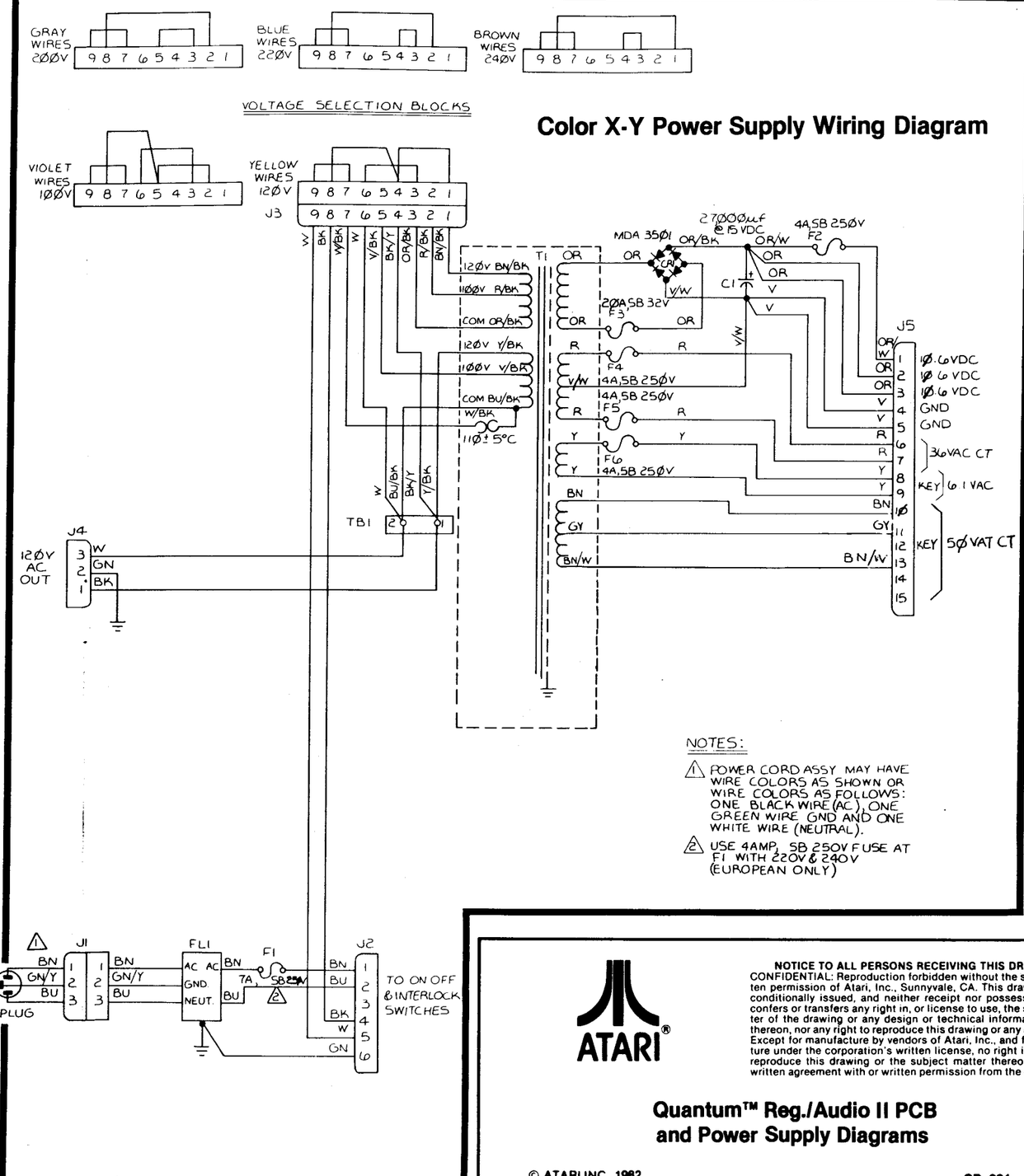

NOTES:

1. POWER CORD ASSY MAY HAVE WIRE COLORS AS SHOWN OR WIRE COLORS AS FOLLOWS: ONE BLACK WIRE (AC), ONE GREEN WIRE GND AND ONE WHITE WIRE (NEUTRAL).
2. USE 4AMP, SB 250V FUSE AT F1 WITH 220V & 240V (EUROPEAN ONLY)

ATARI®

Quantum™ Reg./Audio II PCB and Power Supply Diagrams

A Warner Communications Company

SP-221 Sheet 2A
1st Printing

Coin-Door Wiring Diagram

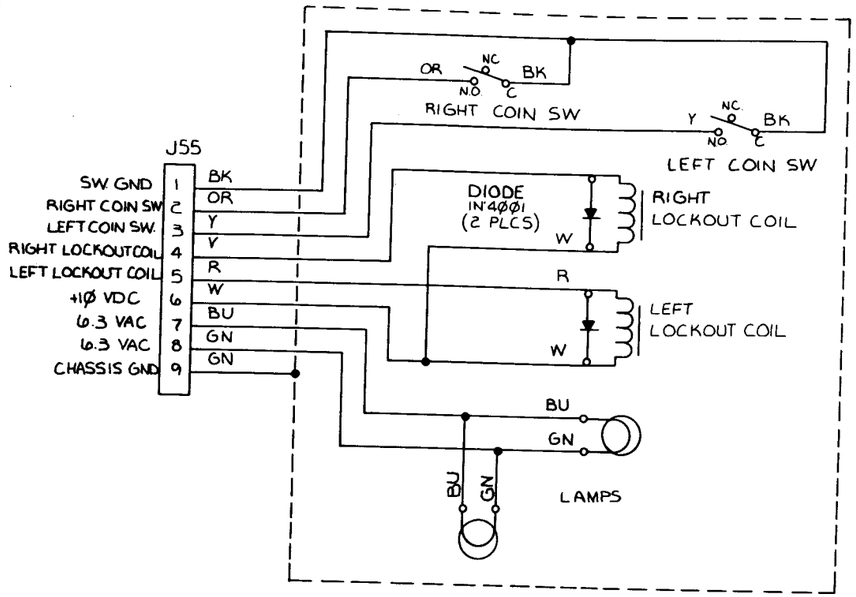

Utility Panel Wiring Diagram

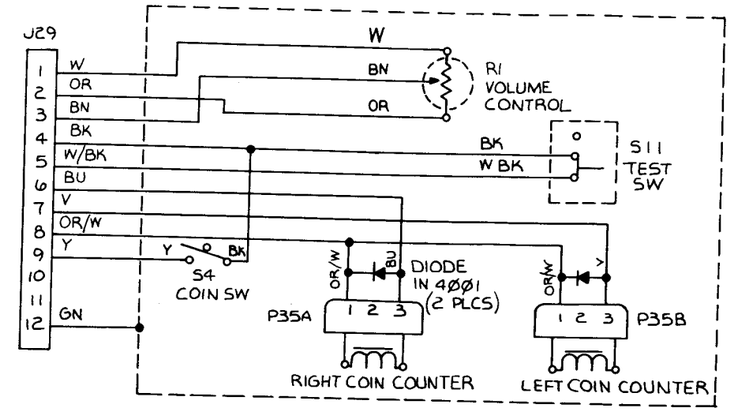

Coupler PCB Schematic

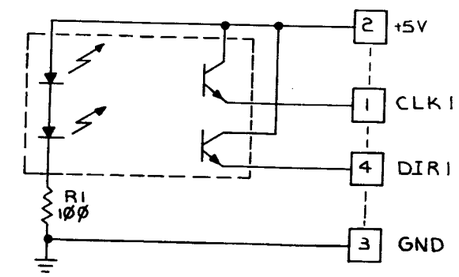

Fluorescent Light Wiring Diagram

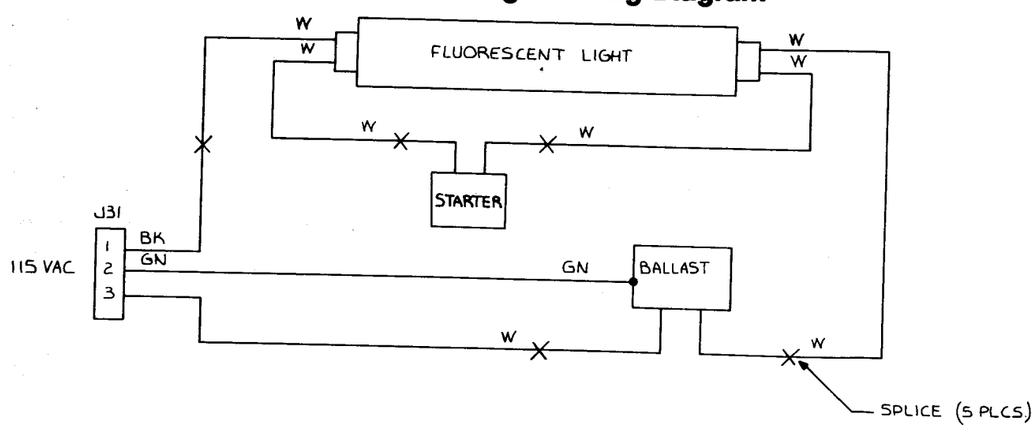

ATARI®

Quantum™ Game Wiring Interfaces

A Warner Communications Company

SP-221 Sheet 2B
1st Printing

MEMORY MAP

HEXIDECIMAL ADDRESS	FUNCTION
000000 - 003FFF	ROM0
004000 - 004FFF	ROM1
008000 - 00BFFF	ROM2
00C000 - 00FFFF	ROM3
010000 - 013FFF	ROM4
018000 - 01BFFF	RAM0
01C000 - 01CFFF	RAM1
940000	$\overline{\text{TRACKBALL}}$
948000	$\overline{\text{SWITCHES}}$
950000	$\overline{\text{COLORAM}}$
958000	$\overline{\text{CONTROL}}$
960000 - 970000	$\overline{\text{RECALL}}$
968000	$\overline{\text{VGRST}}$
970000	$\overline{\text{VGGO}}$
978000	$\overline{\text{WDCLR}}$
900000	NVRAM
840000	I/OS
800000 - 801FFF	VMEM
940000	I/O
900000	DTACK1

Schematic Reference Designators and Symbols

Logic symbols depict the logic function performed by that particular device and may differ from the manufacturer's data.

REFERENCE DESIGNATORS:

C	Capacitor
CR	Diode, signal or rectifier
F	Fuse
J	Connector
L	Inductor, fixed or variable
LS	Speaker
P	Connector
Q	Transistor or silicon-controlled rectifier
R	Resistor, fixed or variable
S	Switch
T	Transformer
TP	Twisted wire pair
VR	Voltage regulator
Y	Crystal

WIRE COLORS:

R	Red
GN	Green
Y	Yellow
W	White
BU	Blue
BN	Brown
BK	Black
OR	Orange
V	Violet
GY	Gray

Electrical components shown on the schematic diagrams are in the following units unless otherwise noted:

Capacitors = microfarads (μf)
Resistors = ohms (Ω)
Inductors = microhenrys (μh)

SYMBOLS:

Ground

Test Point

PCB edge connector pad

PCB test connector pad

ATARI®

Quantum™ Memory Map and Schematic Notes

A Warner Communications Company

SP-221 Sheet 3A
1st Printing

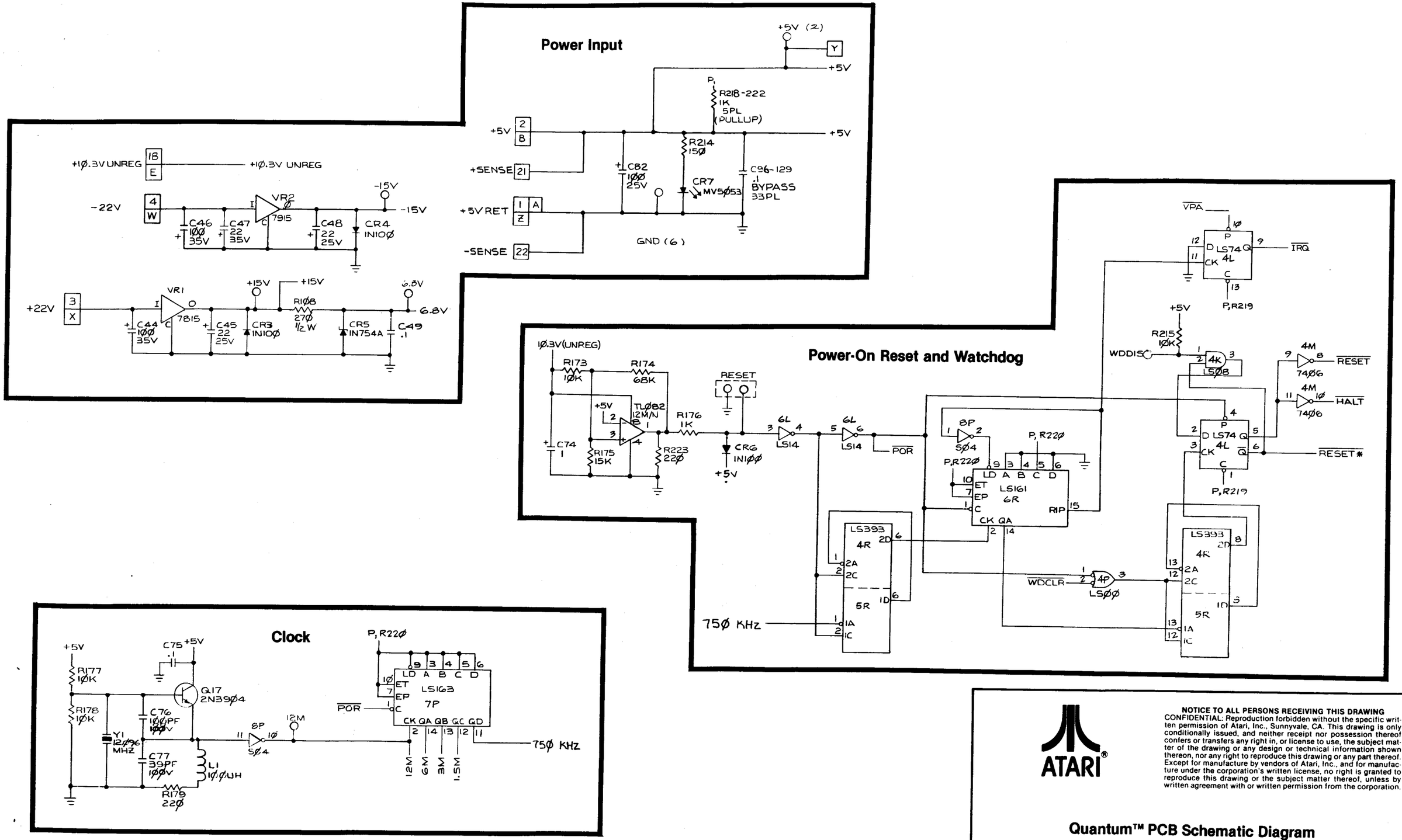

ATARI®

Quantum™ PCB Schematic Diagram

A Warner Communications Company

SP-221 Sheet 3B
1st Printing

Microprocessor

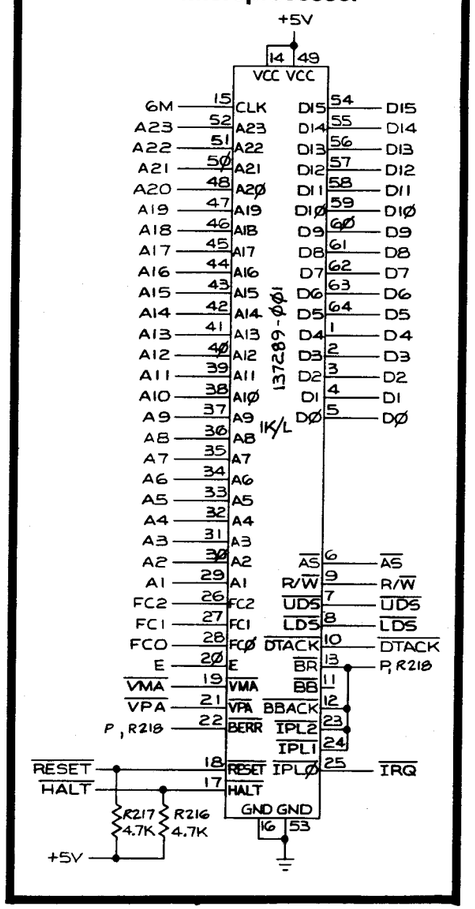

Address Bus Buffers

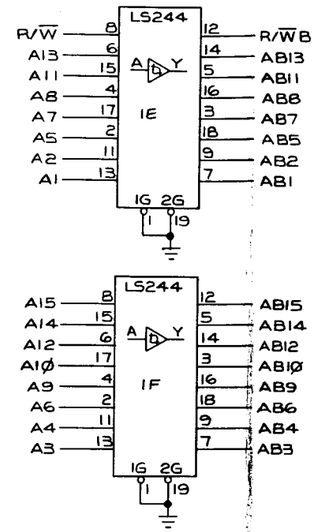

Bidirectional Data Bus Buffers

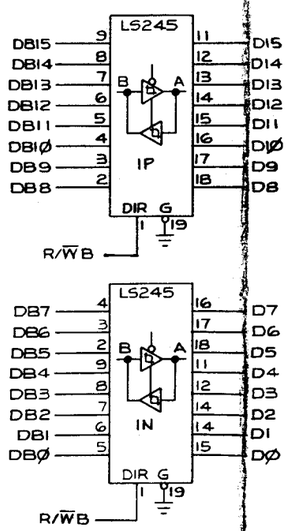

Address Decoders

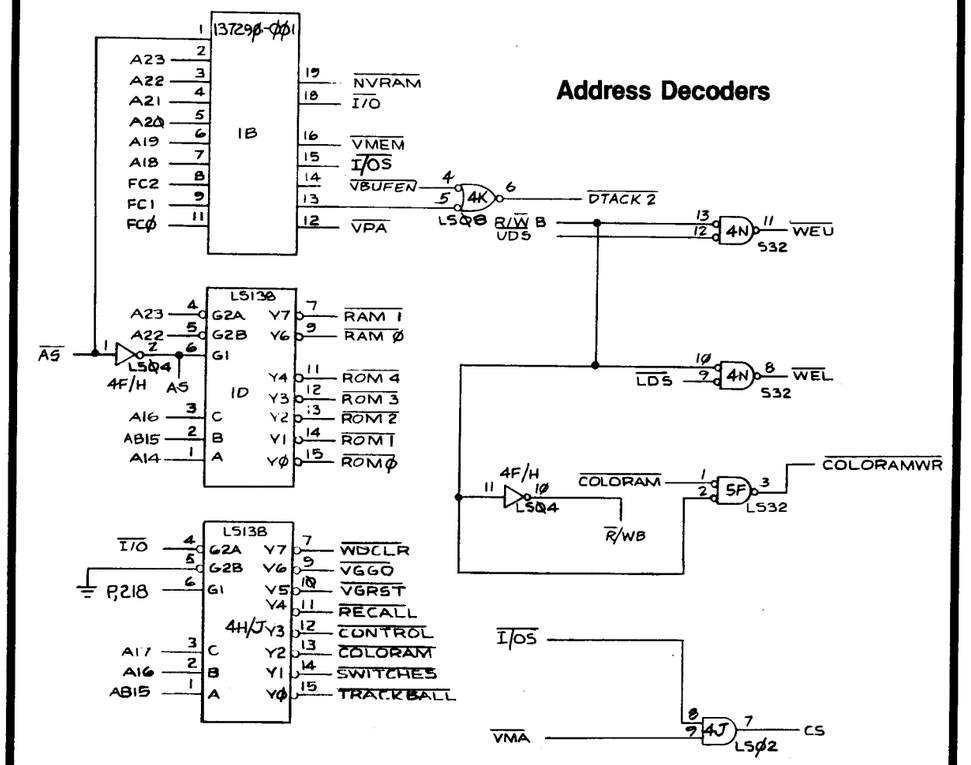

ATARI®

Quantum™ PCB Schematic Diagram

A Warner Communications Company

SP-221 Sheet 4A
1st Printing

Program RAM

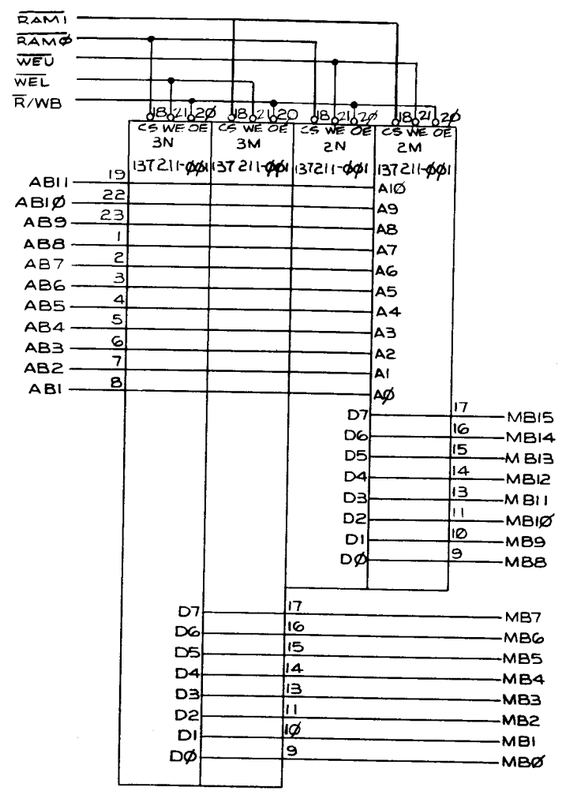

Data Transfer Acknowledge Generator

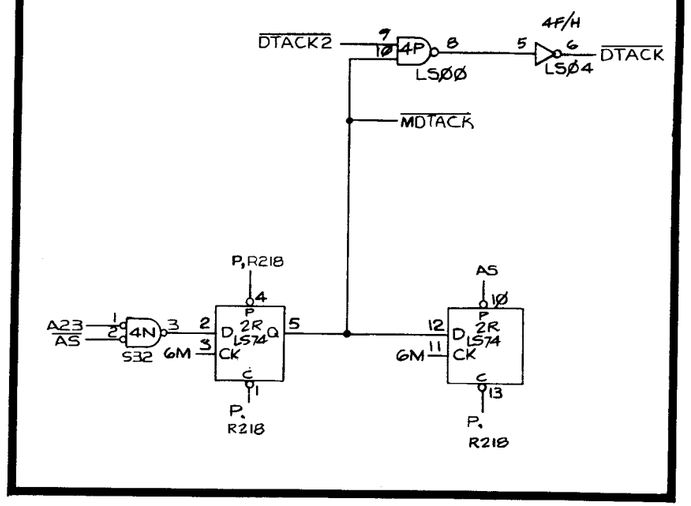

Quantum™ PCB Schematic Diagram

SP-221 Sheet 4B
1st Printing

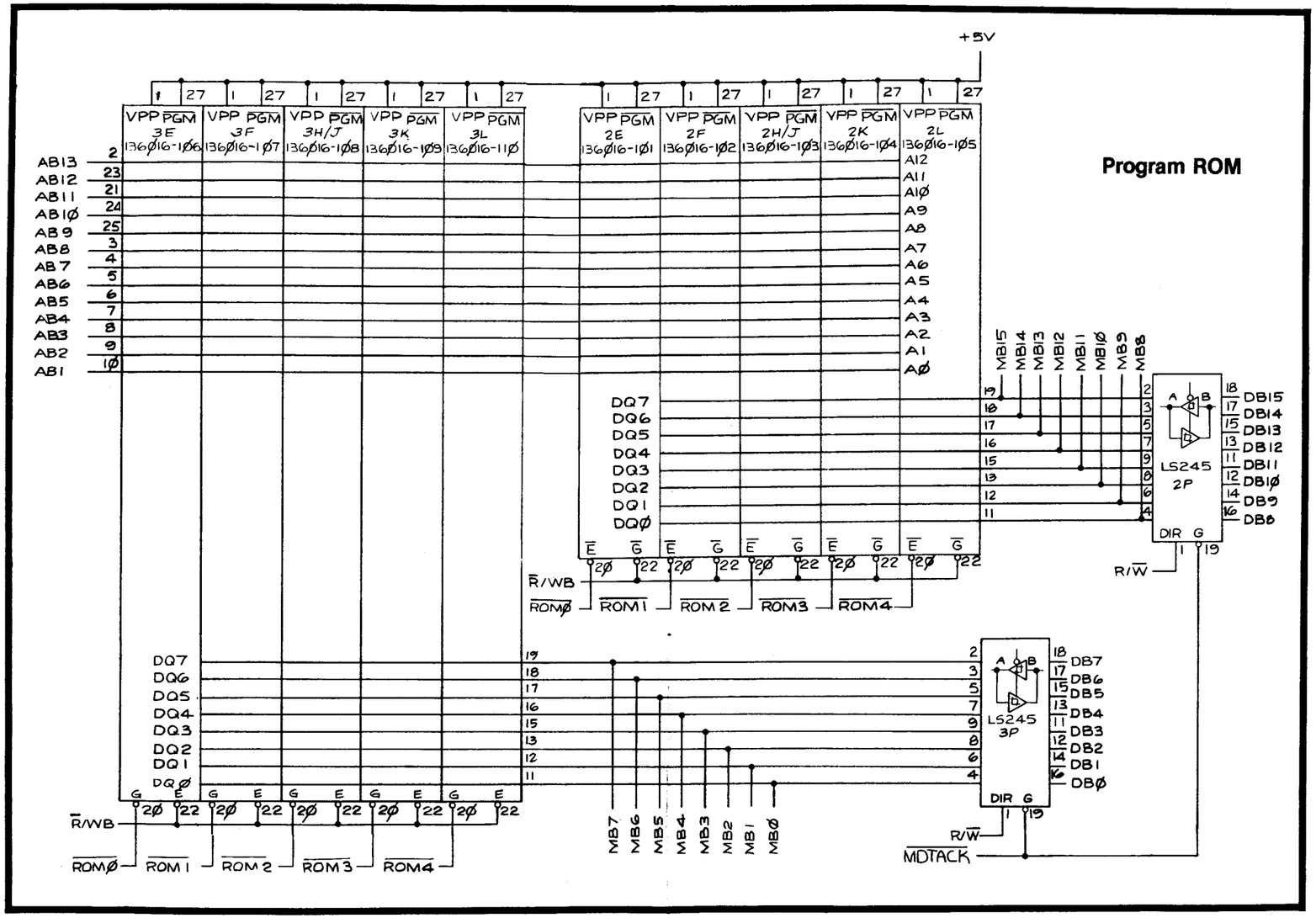

ATARI®

Quantum™ PCB Schematic Diagram

A Warner Communications Company

SP-221 Sheet 5A
1st Printing

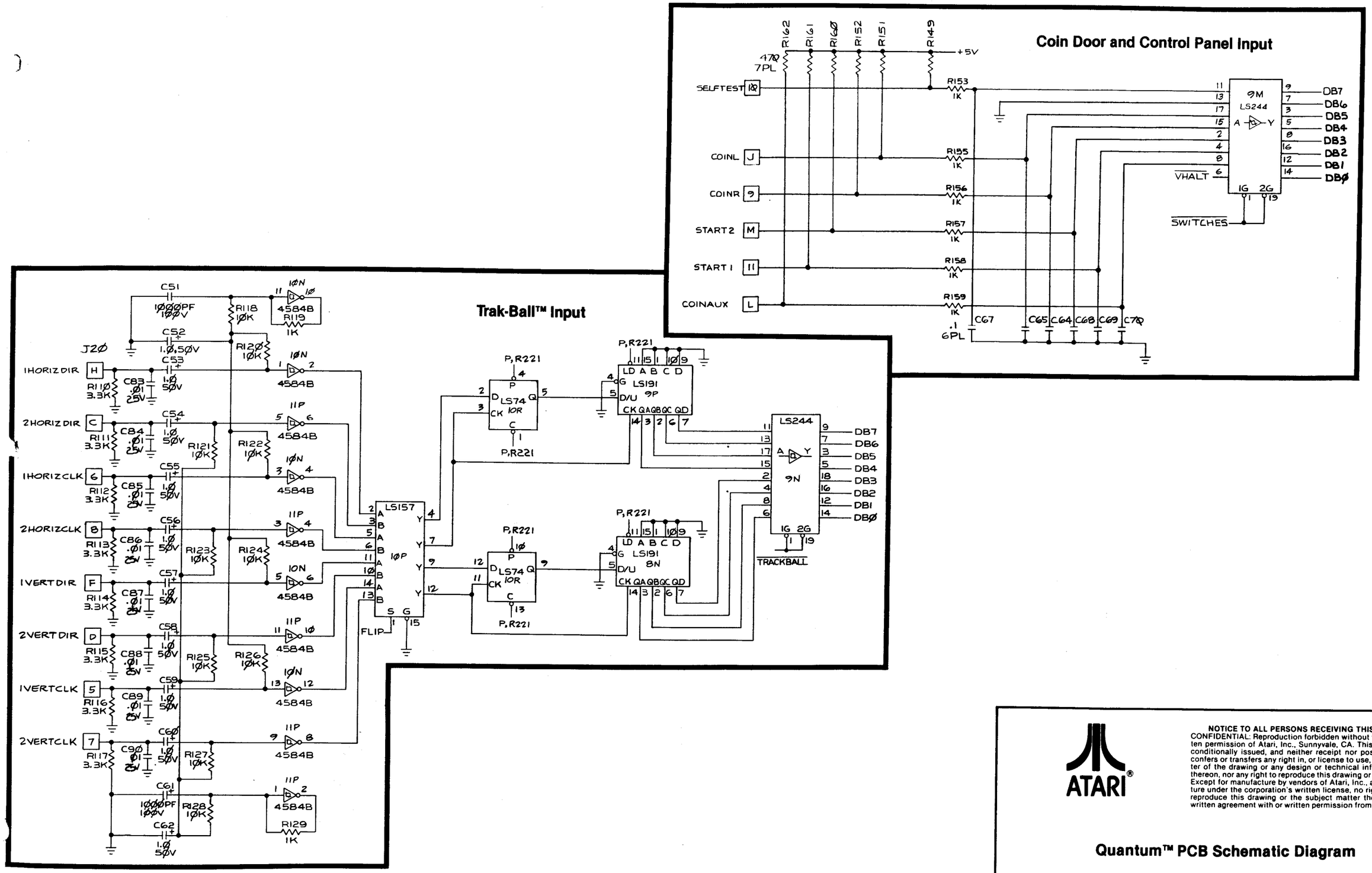

ATARI®

Quantum™ PCB Schematic Diagram

A Warner Communications Company

SP-221 Sheet 5B
1st Printing

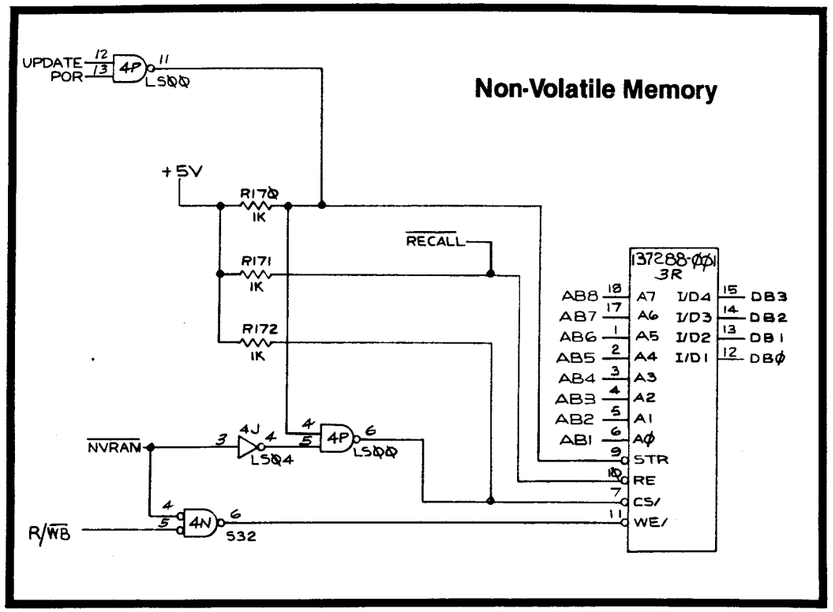

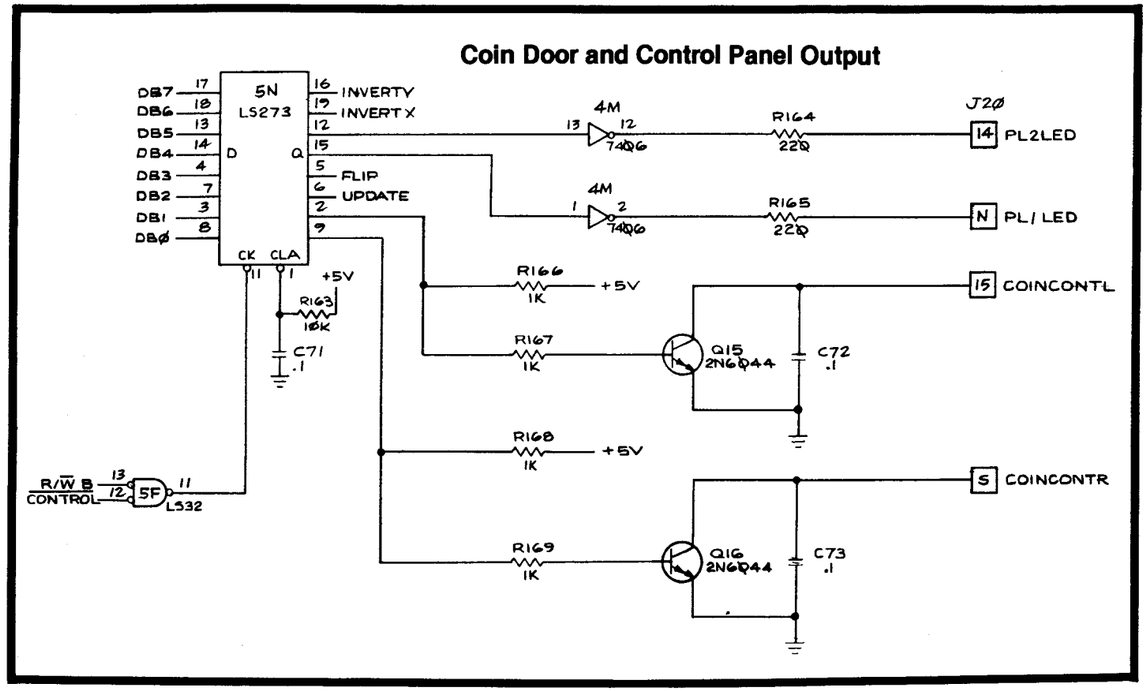

ATARI®

Quantum™ PCB Schematic Diagram

A Warner Communications Company

SP-221 Sheet 6A
1st Printing

Vector Memory Arbitrator

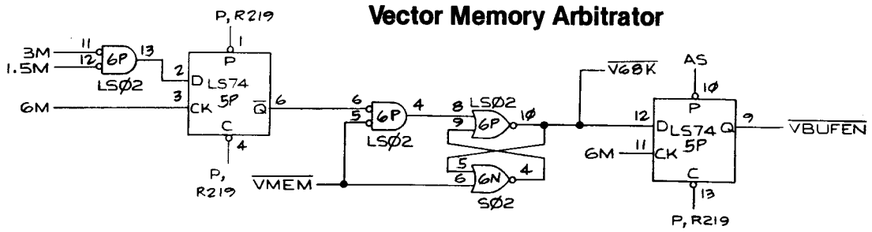

Vector Memory

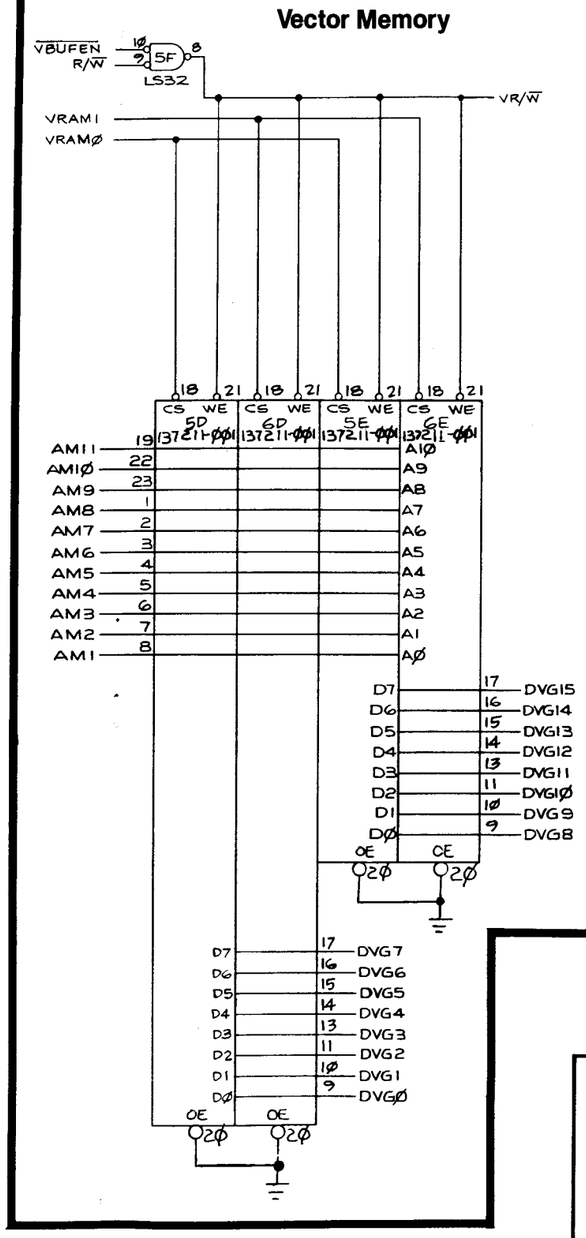

Bidirectional Vector Memory Data Buffers

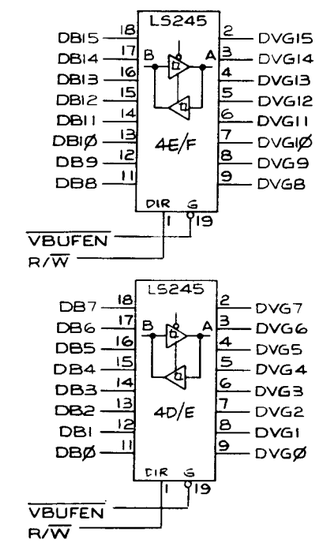

ATARI®

Quantum™ PCB Schematic Diagram

A Warner Communications Company

SP-221 Sheet 6B

1st Printing

Vector Data Shifters

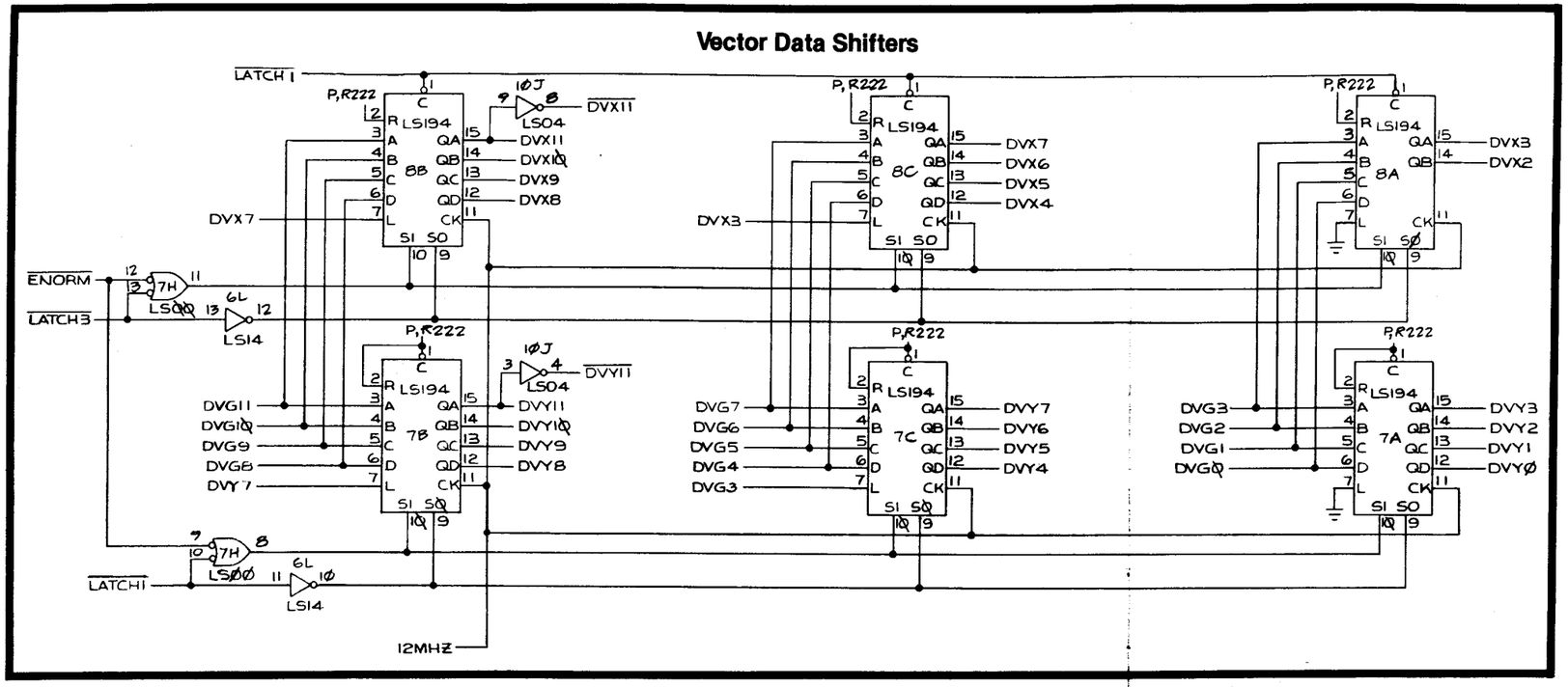

Op Code and Intensity Latches

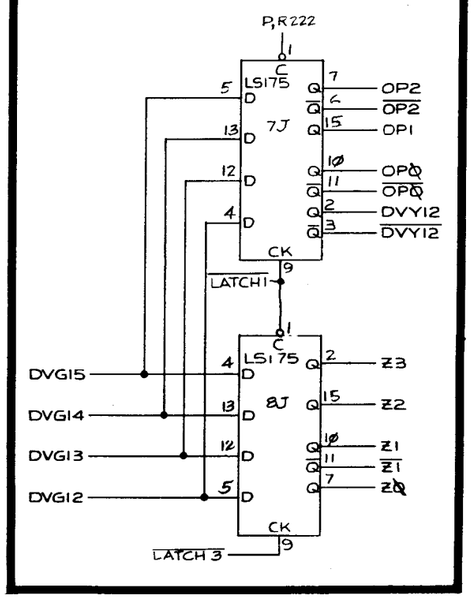

ATARI®

Quantum™ PCB Schematic Diagram

A Warner Communications Company

SP-221 Sheet 7A
1st Printing

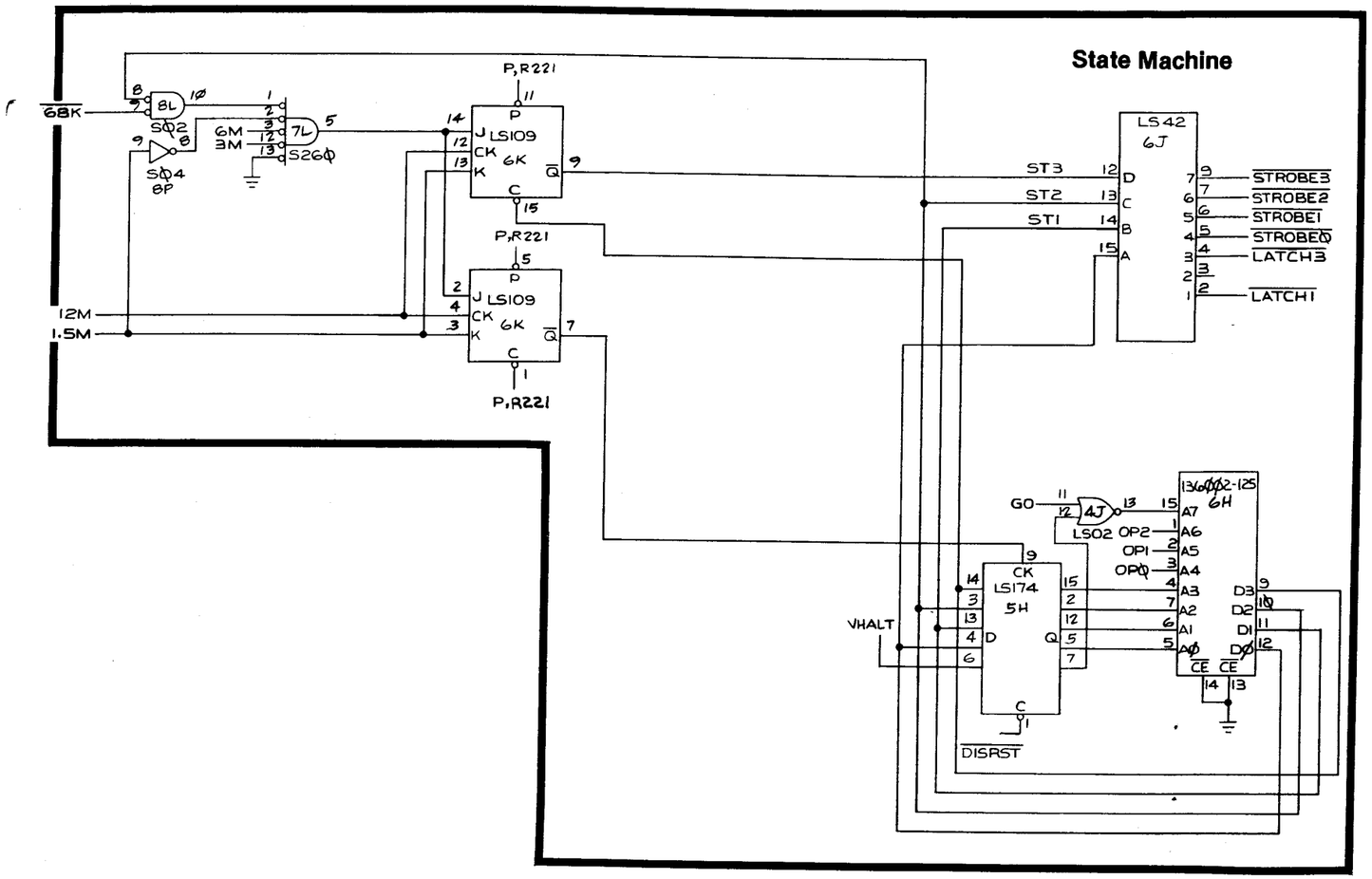

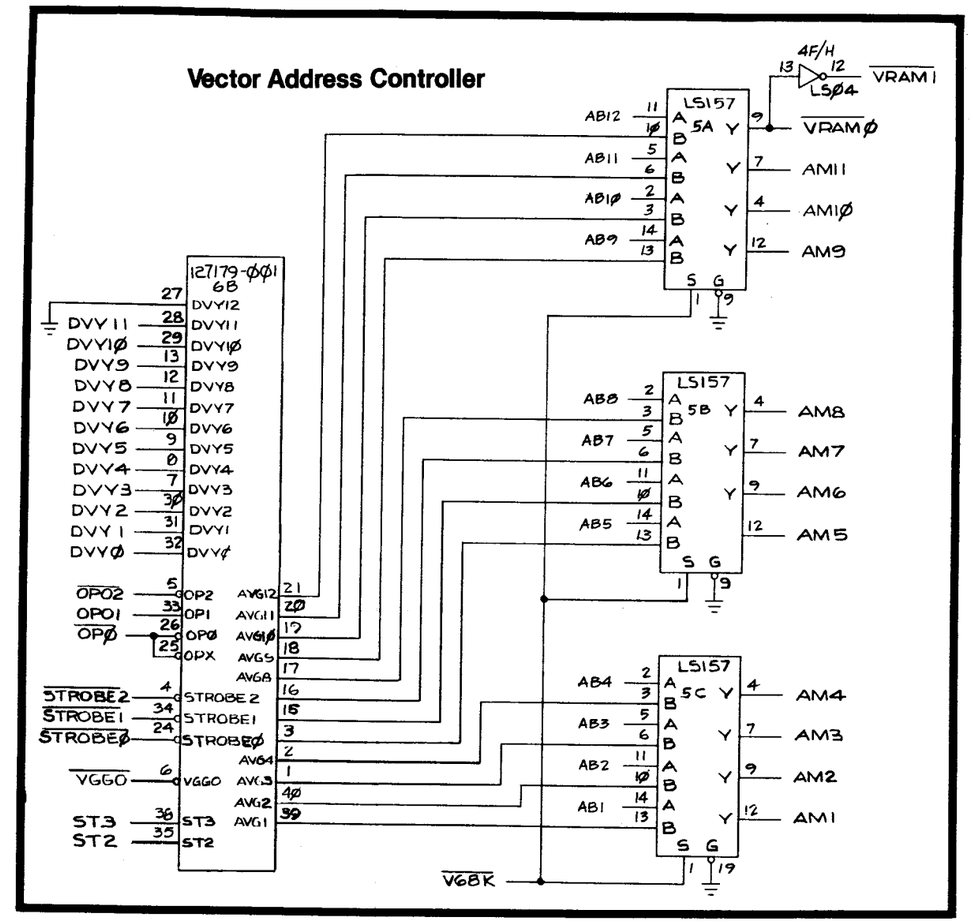

Quantum™ PCB Schematic Diagram

SP-221 Sheet 7B
1st Printing

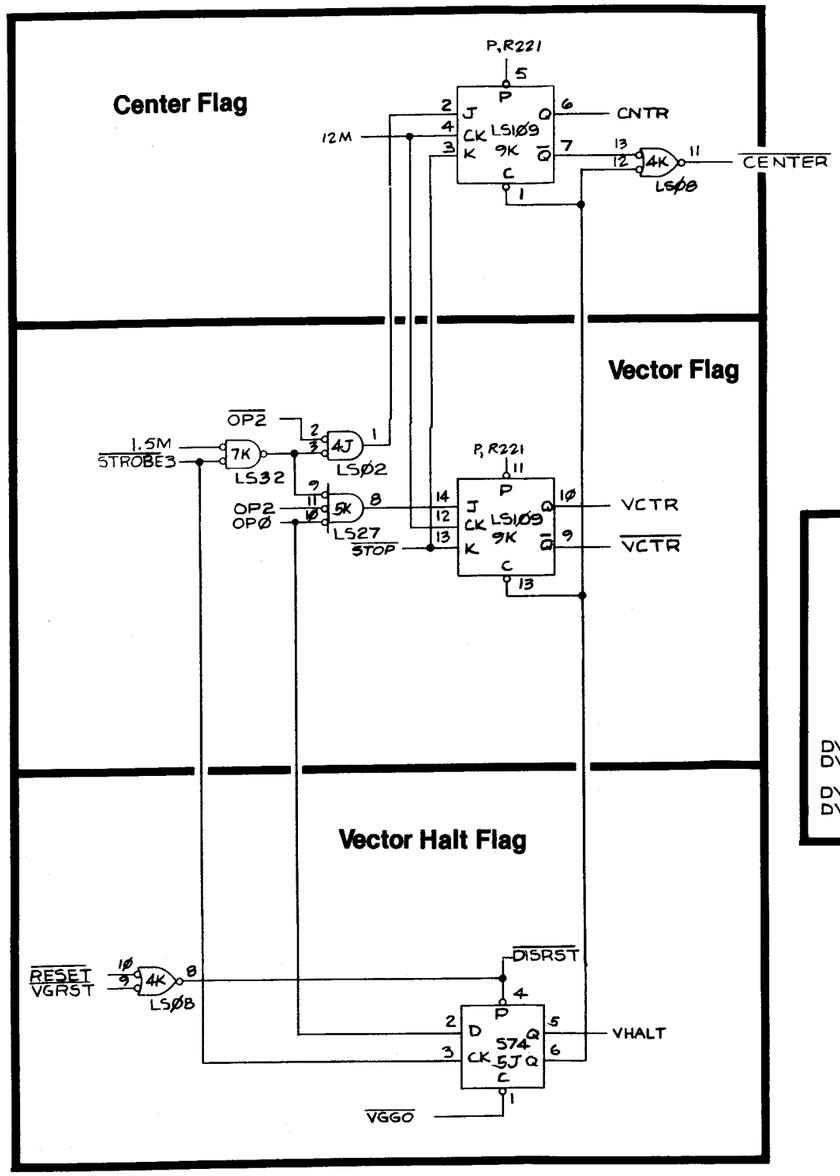

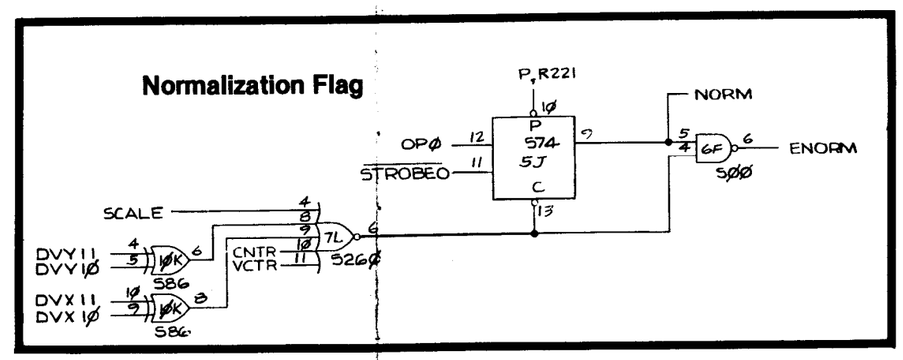

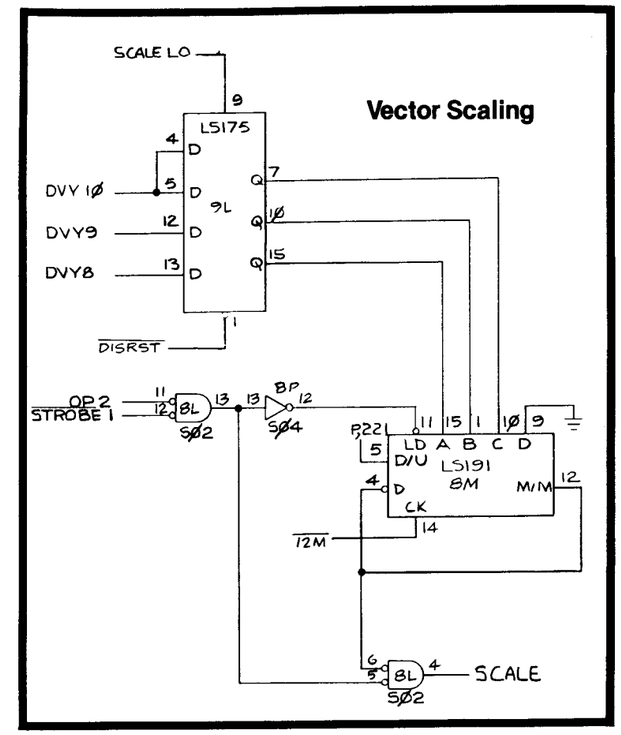

ATARI®

Quantum™ PCB Schematic Diagram

A Warner Communications Company

SP-221 Sheet 8A
1st printing

Vector Timer

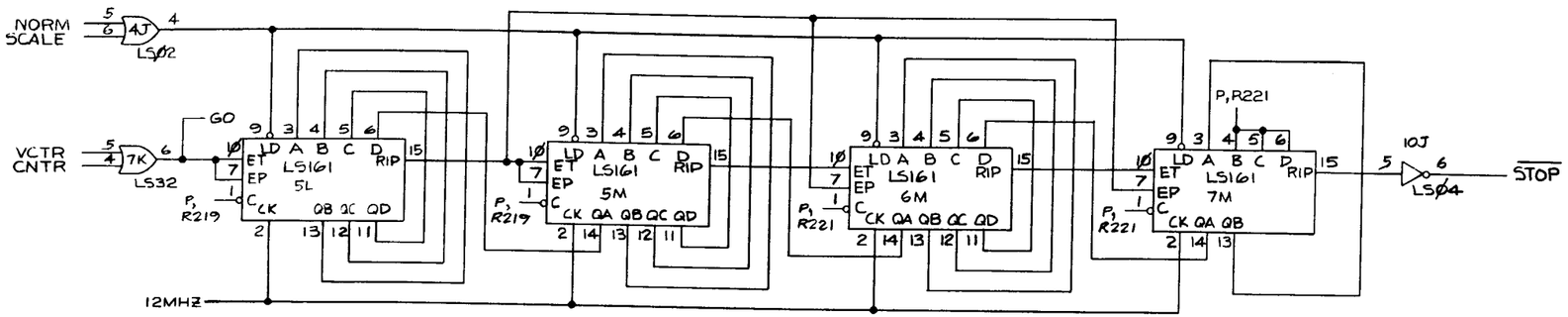

Z Intensity

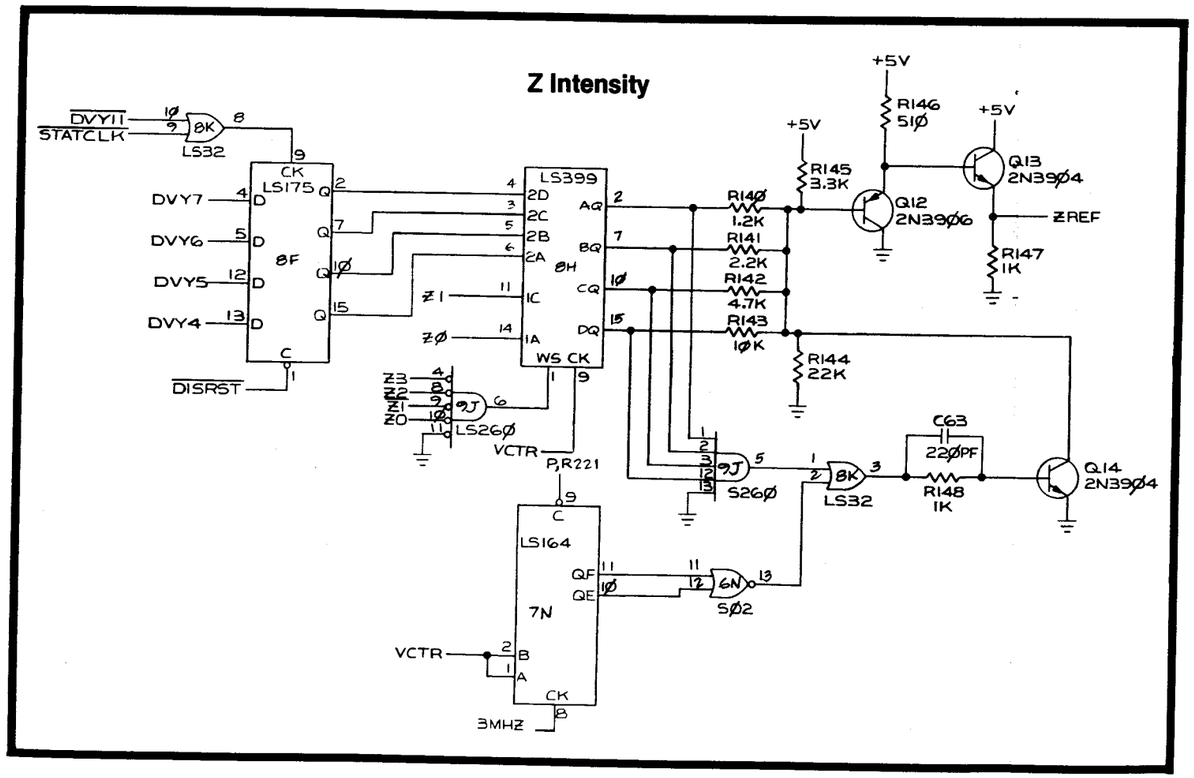

Intensity Correction

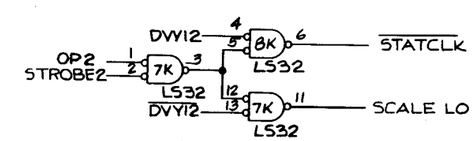

ATARI®

Quantum™ PCB Schematic Diagram

A Warner Communications Company

SP-221 Sheet 8B
1st Printing

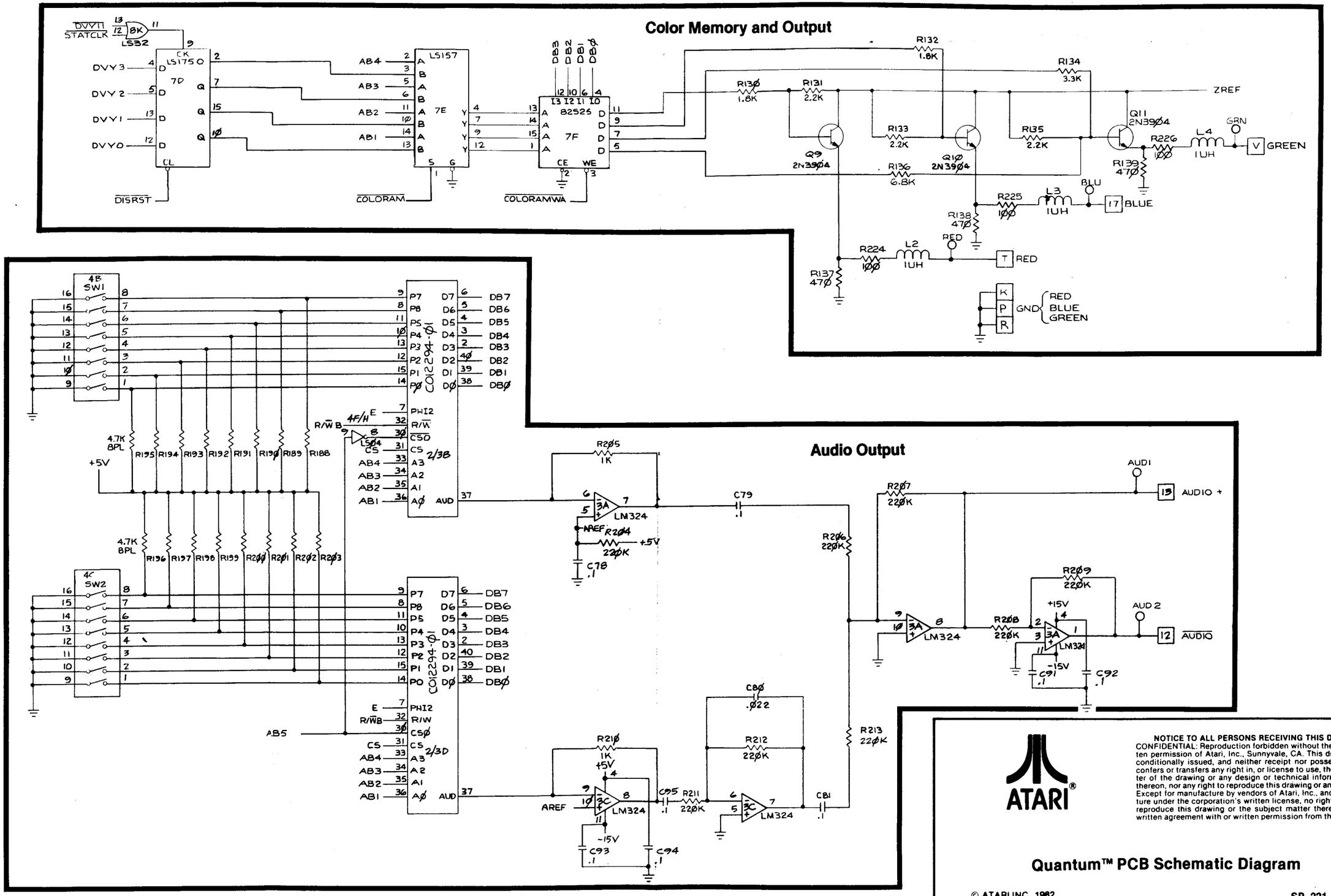

ATARI®

Quantum™ PCB Schematic Diagram

A Warner Communications Company

SP-221 Sheet 9A
1st Printing

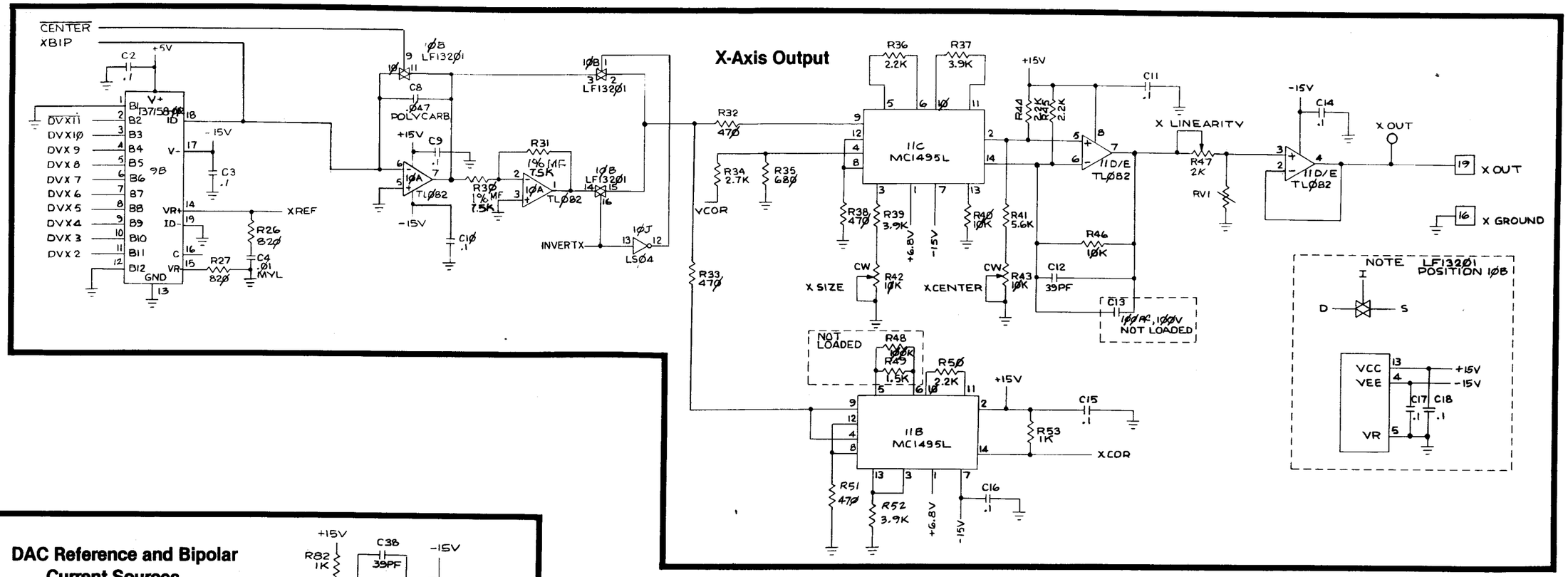

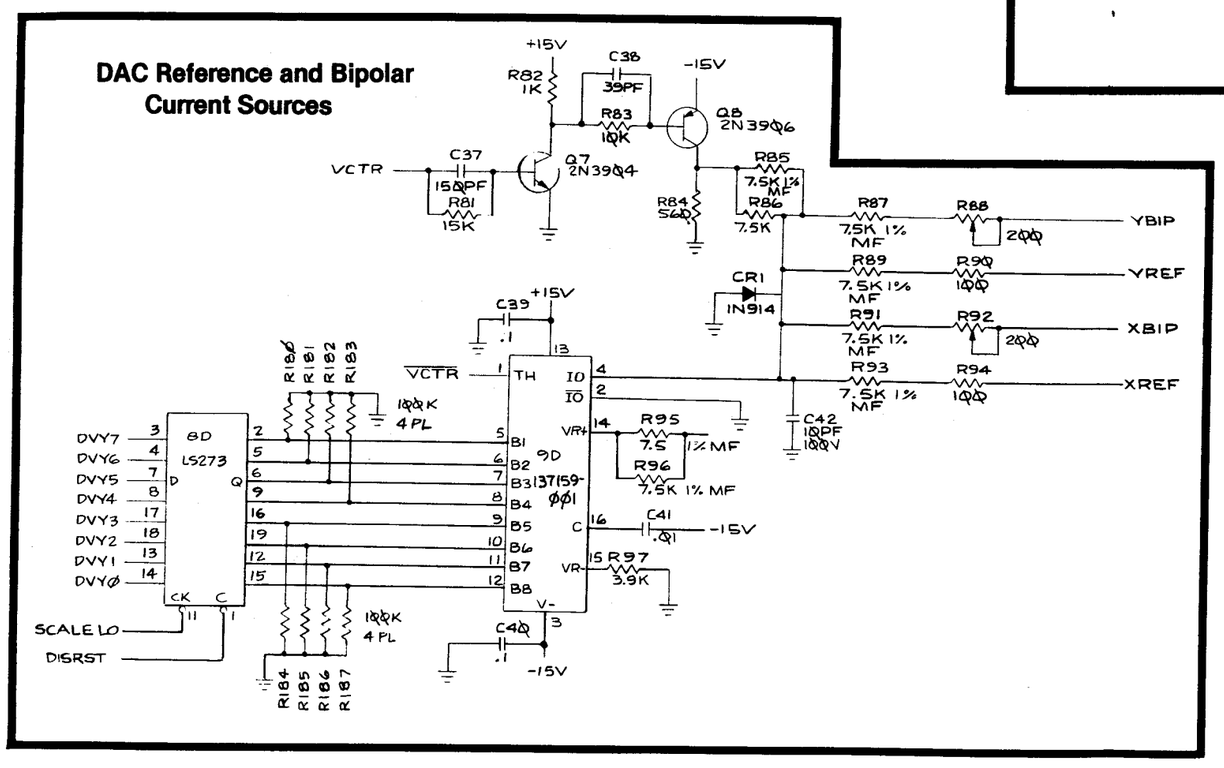

ATARI®

Quantum™ PCB Schematic Diagram

A Warner Communications Company

SP-221 Sheet 9B
1st Printing

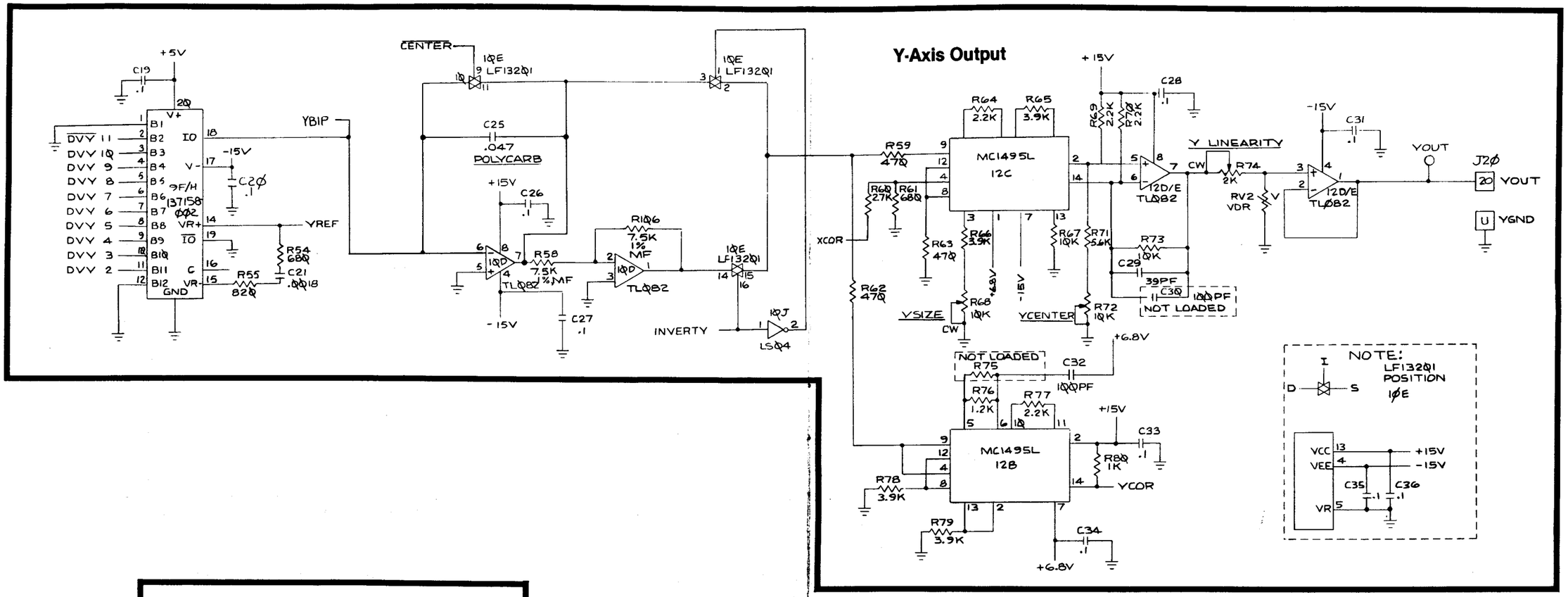

Adjusting the X- and Y-Axis Video Potentiometers

The X- and Y-Axis potentiometers; which are X SIZE, X CENTER, X LINEARITY, Y SIZE, Y CENTER, and Y LINEARITY; are set at the factory and then sealed. These do not need to be adjusted by the game operator.

ATARI®

Quantum™ PCB Schematic Diagram

A Warner Communications Company

SP-221 Sheet 10A
1st Printing

Amplifone Deflection PCB

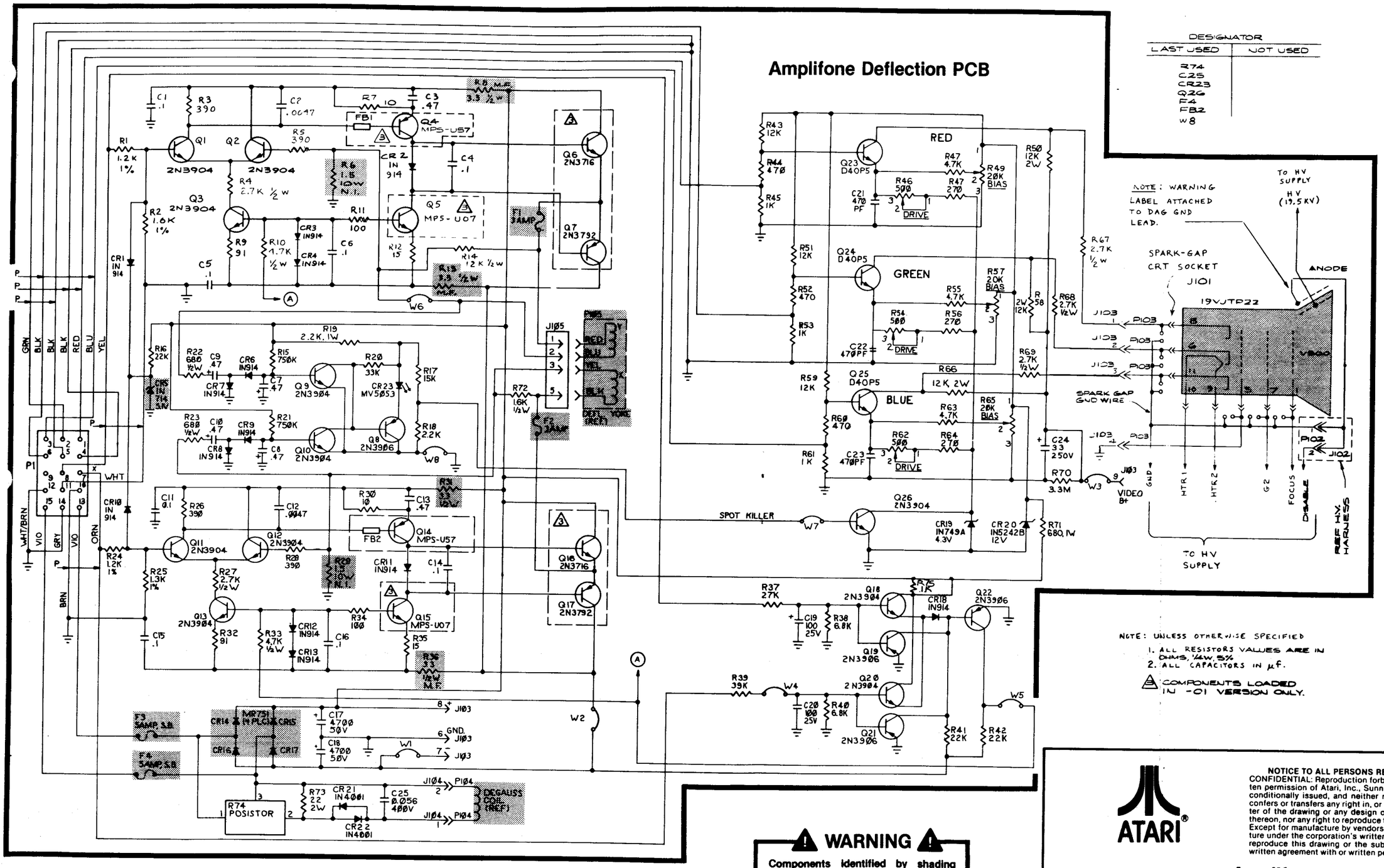

WARNING

Components identified by shading have special characteristics important to safety and should be replaced only with identical types.

ATARI®

Amplifone
Color X-Y Display Schematic

A Warner Communications Company

SP-221 Sheet 10B
1st Printing

Amplifone Main Wiring Diagram

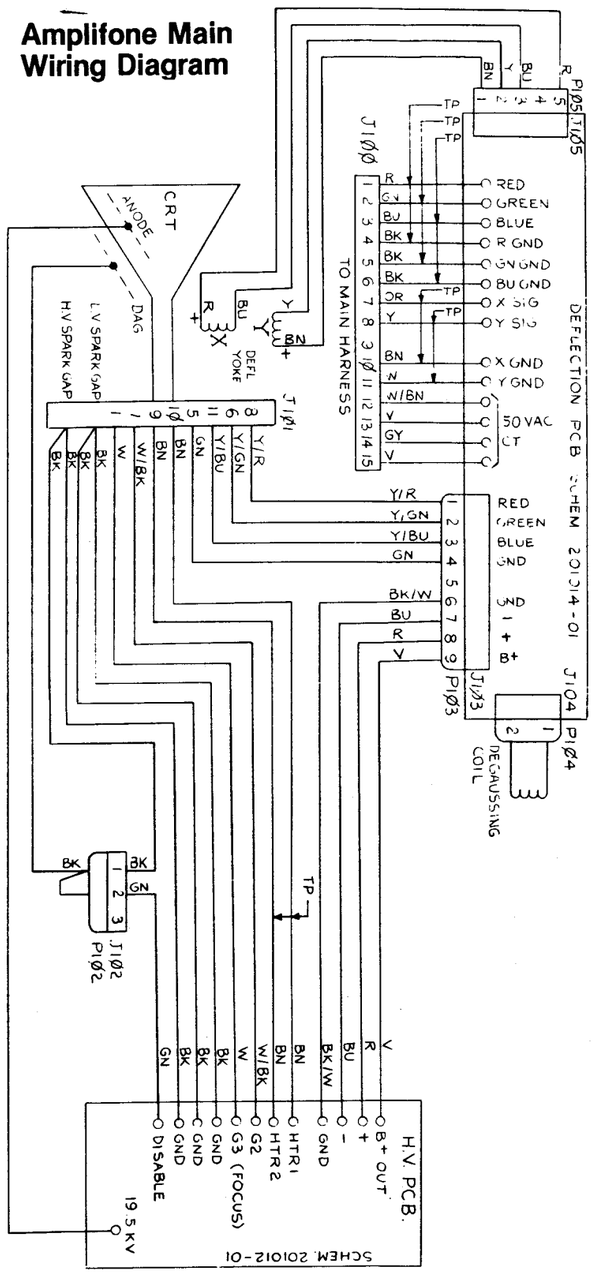

Amplifone High-Voltage PCB

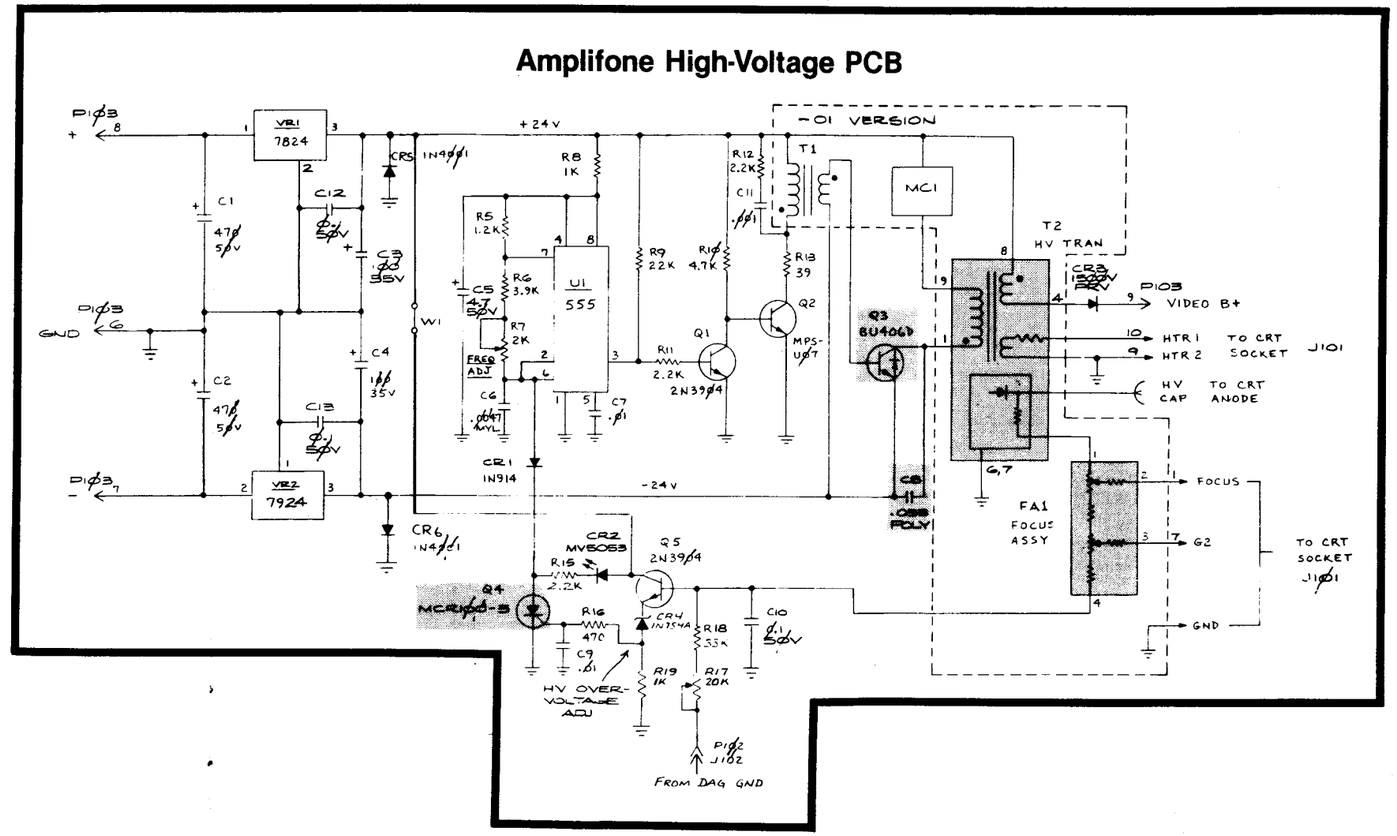

Note: Unless otherwise specified-
1. All resistor values are in ohms, ¼ W, 5%
2. All capacitor values are in μF.

DESIGNATOR

LAST USED	NOT USED
R19	R1-4, 14
C13	
Q5	
VR2	
T2	
FA1	
U1	
MC1	
CR6	
W1	

WARNING

Components identified by shading have special characteristics important to safety and must be replaced only with identical parts.

ATARI®

Amplifone
Color X-Y Display Schematic

SP-221 Sheet 11A
1st Printing

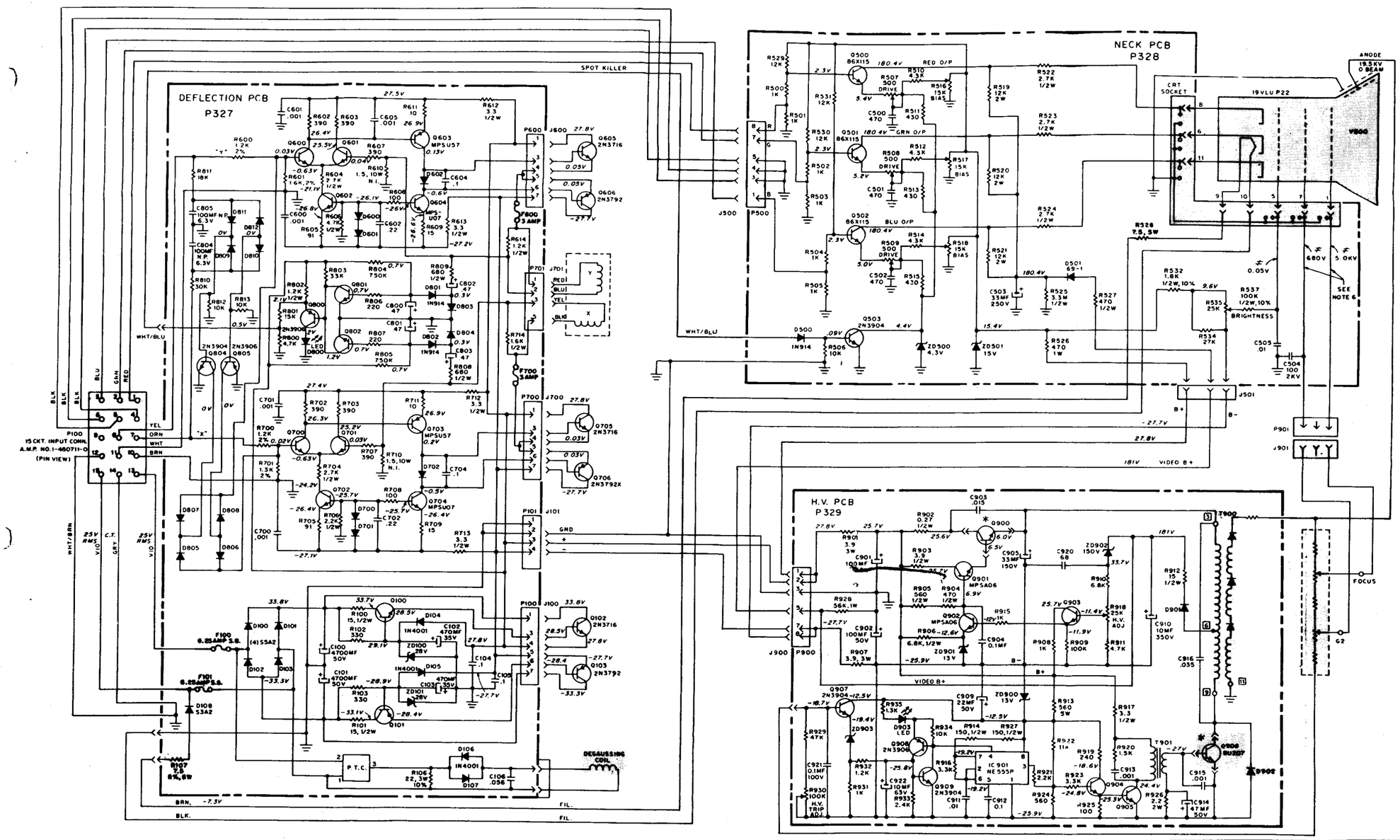

⚠ WARNING ⚠

Components identified by shading have special characteristics important to safety and should be replaced only with identical types.

GENERAL NOTES

1. Resistance values in ohms, ¼ watt, ±5%, unless otherwise noted. K = 1,000, M = 1,000,000
2. Capacitance value of 1 or less is in microFarads, above 1 in picoFarads, unless otherwise noted.
3. * Q900 and Q906 are not in High-Voltage PCB.
4. All D.C. voltages are ±10% measured from point indicated to ground, using a high-impedance meter. Voltages are measured with no signal input and controls are in a normal operating position.
5. Circled numbers indicate location of waveform reading.
6. ZD100-101 uses (66X0040-007) zener diode in series with (340X2331-934) 330-ohm resistor in early production models.
7. Use a 1,000:1 probe when measuring G2 (screen) or focus voltage.

ATARI®

Wells Gardner
Color X-Y Display Schematic Diagram

A Warner Communications Company

SP-221 Sheet 11B
1st Printing