2ND PRINTING— NV

SEGA®

CHOPLIFTER

INSTRUCTION MANUAL

FOR HORIZONTALLY
MOUNTED MONITOR

SEGA ENTERPRISES, INC.

2149 PARAGON DR. SAN JOSE, CA 95131

(408) 435-0201

MANUAL NO. 420-5270-91

CONTENTS

° RECOMMENDED WIRING DIAGRAM

° WIRING ROUTING (MAIN HARNESS)

° WIRING ROUTING (CONTROL PANEL HARNESS)

° OPTION SWITCHES / DC POWER REQUIREMENTS

° KIT CONTENTS

CONVERSION KIT CONTENTS

- PC Board
- Generic Main Wiring Harness
- Control Panel Wiring Harness
- 8 Way Joystick Assembly
- Screws and Nuts for Joystick (4)
- Push Button Assemblies (6)
- Control Panel Overlay
- Monitor Card
- Side Decals (2)
- Plastic Marquee
- Instruction Manual
- License Seal

PREVENTION OF COUNTERFEITING AND CONVERSION

LABELING

To prevent counterfeits and conversions, the following labels are put on all the SEGA products. When handling such goods, be sure to confirm the labels. They are used to prevent illegal acts such as the unauthorized copying of the products and the printed circuit boards thereof or carrying on business by manufacturing similar merchandise or by converting, selling or using such products or printed circuit boards.

ORIGINAL SEAL

The following seal is put on the machines manufactured by SEGA.

LICENSE SEAL

The following seal is put on the kits, such as the printed circuit boards, of SEGA products.

COPYRIGHT NOTICE

This SEGA product has the copyright notice as follows:

© SEGA 1985

This signifies that this work was disclosed in 1985 and is the property of SEGA ENTERPRISES, LTD.

NOTICE WARNING

After installation of this kit , the 5 volt power supply must be checked and adjusted to make certain exactly 5 volts are present at pins 1 & 3 (1 is negative and 3 is positive) of the 44 pin edge connector. The voltage check and adjustment must be done while the PCB is plugged in to the 44 pin connector to supply the proper load. This PCB will not operate properly on voltages below 5 volts as measured at the board.

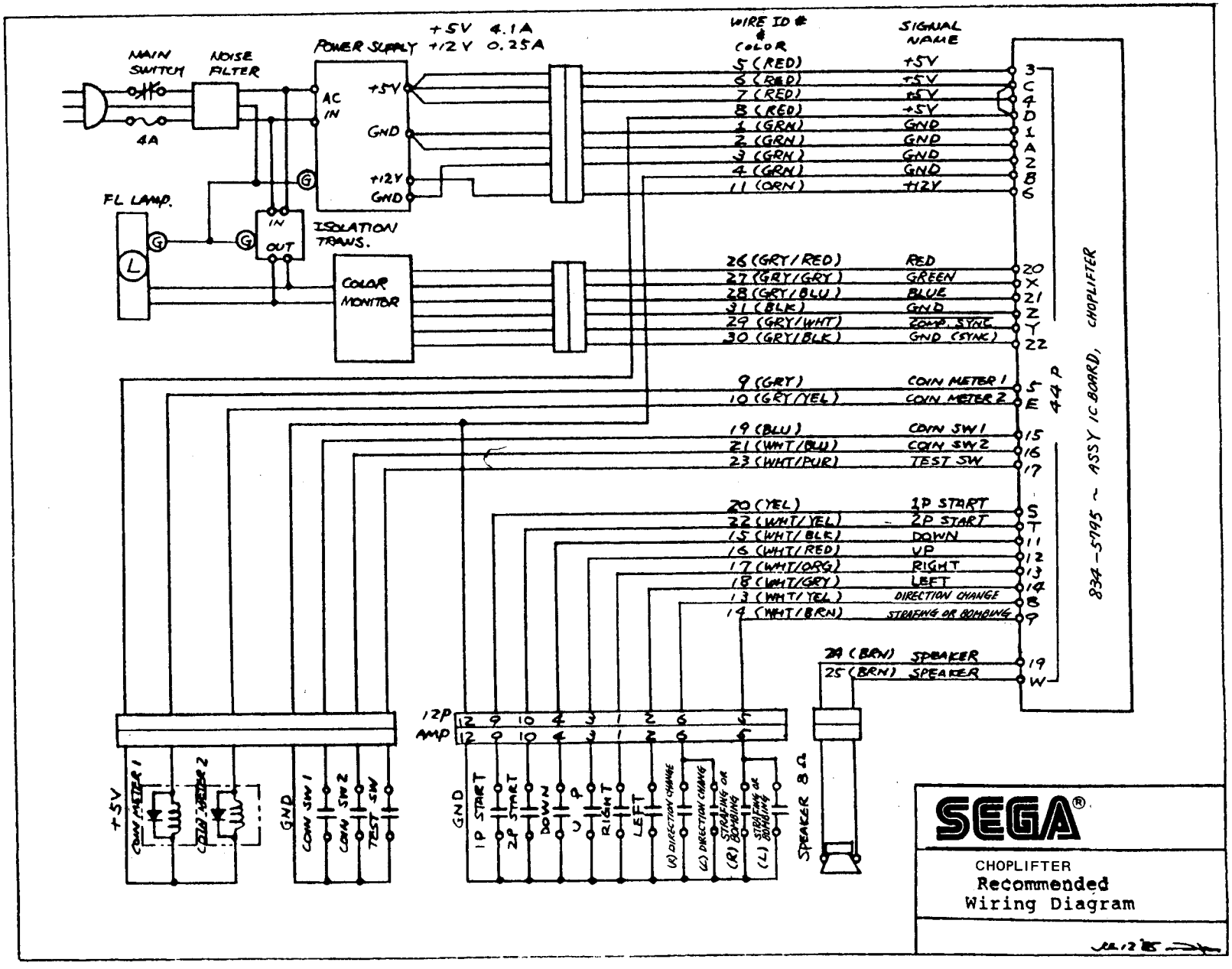
MAIN SWITCH
NOISE FILTER
4A
POWER SUPPLY
+5V 4.1A
+12V 0.25A
AC IN
+5V
GND
+12V
GND
FL LAMP.
ISOLATION TRANS.
IN
OUT
COLOR MONITOR
WIRE ID # & COLOR
SIGNAL NAME
5 (RED) +5V
6 (RED) +5V
7 (RED) +5V
8 (RED) +5V
1 (GRN) GND
2 (GRN) GND
3 (GRN) GND
4 (GRN) GND
11 (ORN) +12V
26 (GRY/RED) RED
27 (GRY/GRY) GREEN
28 (GRY/BLU) BLUE
31 (BLK) GND
29 (GRY/WHT) COMP. SYNC
30 (GRY/BLK) GND (SYNC)
9 (GRY) COIN METER 1
10 (GRY/YEL) COIN METER 2
19 (BLU) COIN SW 1
21 (WHT/BLU) COIN SW 2
23 (WHT/PUR) TEST SW
20 (YEL) 1P START
22 (WHT/YEL) 2P START
15 (WHT/BLK) DOWN
16 (WHT/RED) UP
17 (WHT/ORG) RIGHT
18 (WHT/GRY) LEFT
13 (WHT/YEL) DIRECTION CHANGE
14 (WHT/BRN) STRAFING OR BOMBING
24 (BRN) SPEAKER
25 (BRN) SPEAKER
834-5745 ~ ASSY IC BOARD, CHOPLIFTER
44P
12P AMP
+5V
COIN METER 1
COIN METER 2
GND
COIN SW 1
COIN SW 2
TEST SW
GND
1P START
2P START
DOWN
UP
RIGHT
LEFT
(L) DIRECTION CHANGE
(L) DIRECTION CHANGE
(R) STRAFING OR BOMBING
(L) STRAFING OR BOMBING
SPEAKER 8Ω
SEGA®
CHOPLIFTER
Recommended
Wiring Diagram

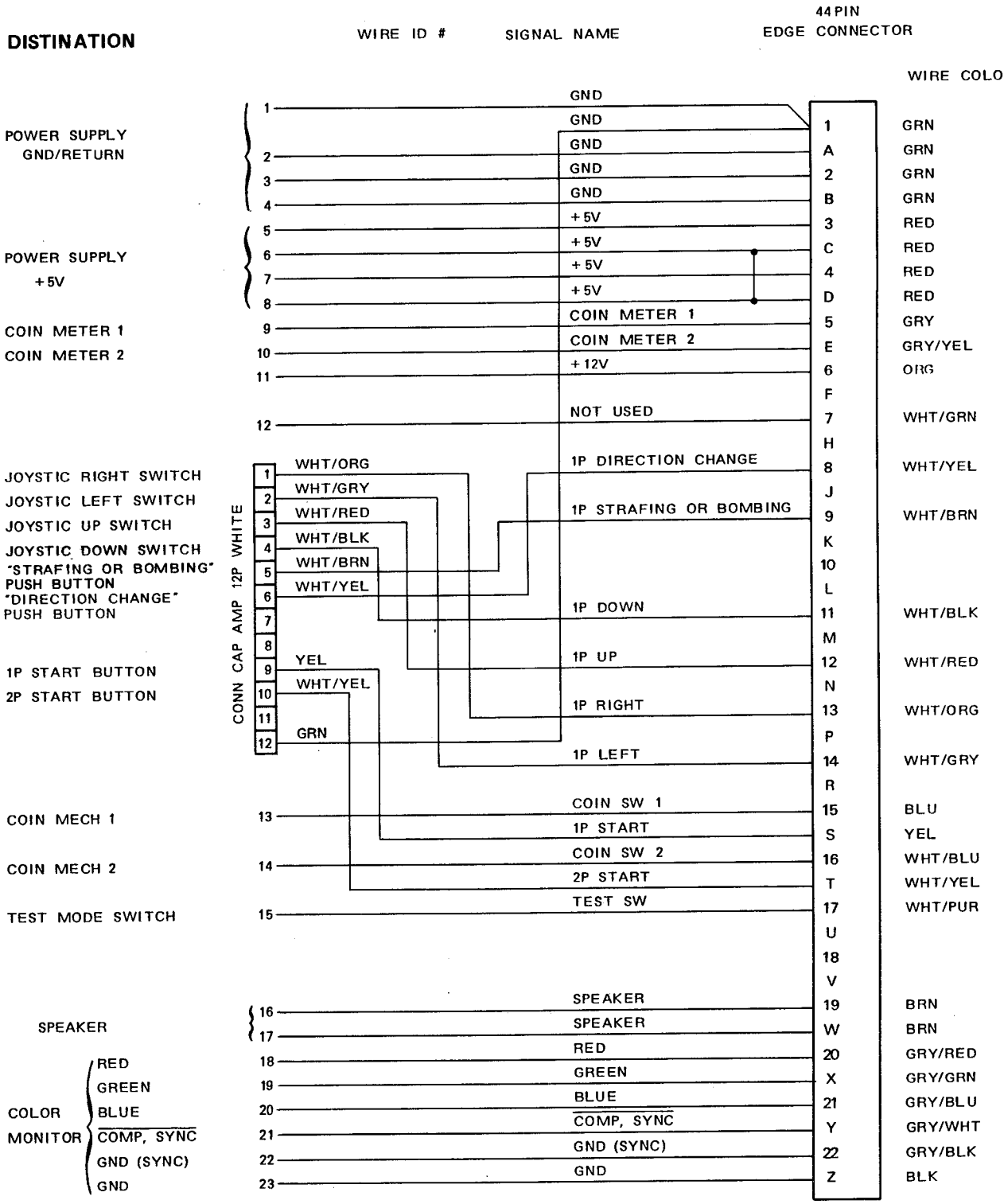

CHOPLIFTER WIRE ROUTING

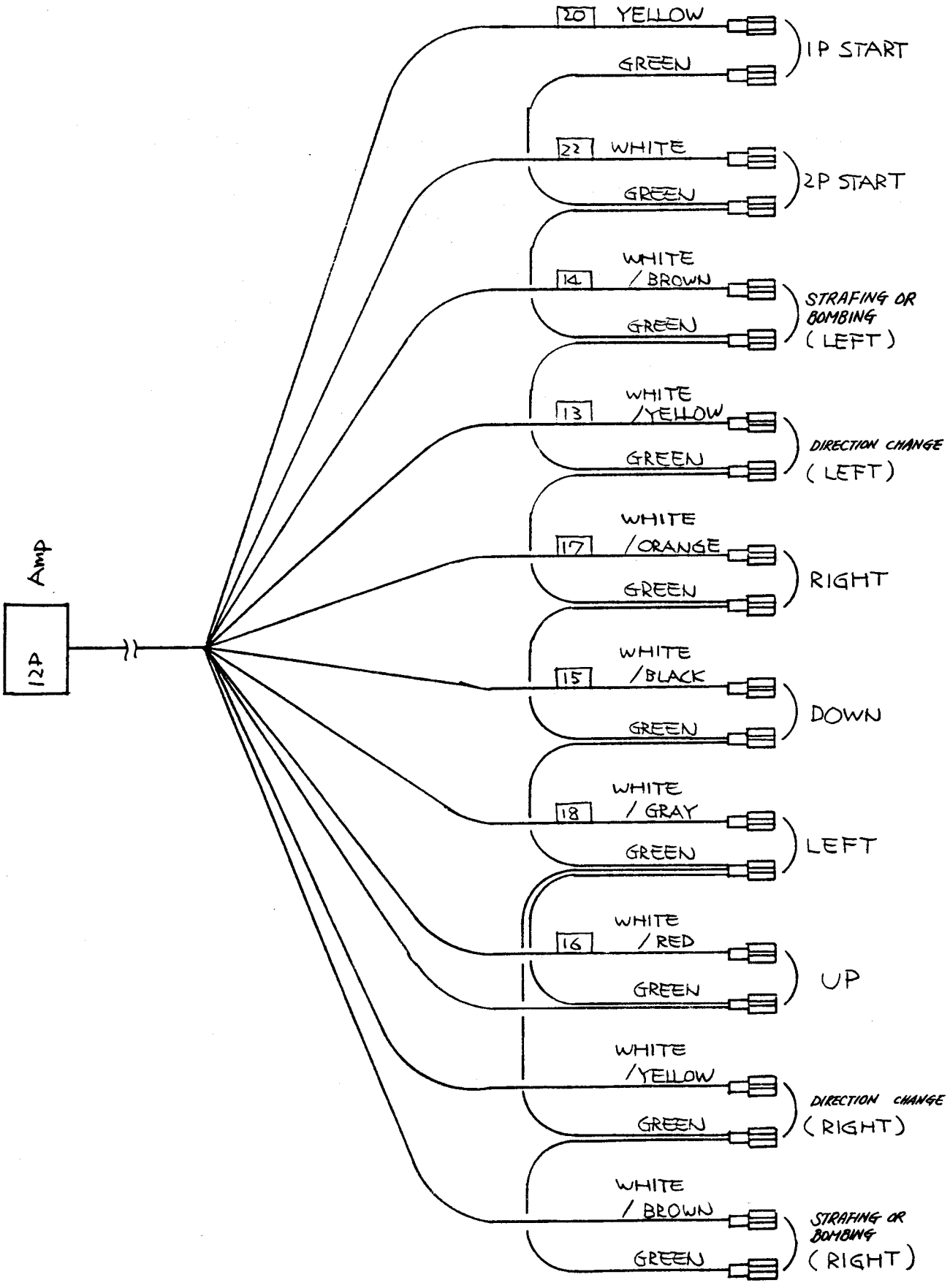

CONTROL PANEL HARNESS

CHOPLIFTER (834 - 5795)

COIN / CREDIT OPTION SWITCH SETTING — DIP SWITCH #A

OPTION	1	2	3	4	5	6	7	8
1 COIN 1 CREDIT	OFF	OFF	OFF	OFF	OFF	OFF	OFF	OFF
1 COIN 2 CREDITS	ON	OFF	OFF	OFF	ON	OFF	OFF	OFF
1 COIN 3 CREDITS	OFF	ON	OFF	OFF	OFF	ON	OFF	OFF
1 COIN 4 CREDITS	ON	ON	OFF	OFF	ON	ON	OFF	OFF
1 COIN 5 CREDITS	OFF	OFF	ON	OFF	OFF	OFF	ON	OFF
1 COIN 6 CREDITS	ON	OFF	ON	OFF	ON	OFF	ON	OFF
2 COINS 1 CREDIT	OFF	ON	ON	OFF	OFF	ON	ON	OFF
3 COINS 1 CREDIT	ON	ON	ON	OFF	ON	ON	ON	OFF
4 COINS 1 CREDIT	OFF	OFF	OFF	ON	OFF	OFF	OFF	ON
2 COINS 3 CREDITS	ON	OFF	OFF	ON	ON	OFF	OFF	ON
2 COINS 1 CREDIT 4 COINS 2 CREDITS 5 COINS 3 CREDITS 6 COINS 4 CREDITS	OFF	ON	OFF	ON	OFF	ON	OFF	ON
2 COINS 1 CREDIT 4 COINS 3 CREDITS	ON	ON	OFF	ON	ON	ON	OFF	ON
1 COIN 1 CREDIT 2 COINS 2 CREDITS 3 COINS 3 CREDITS 4 COINS 4 CREDITS 5 COINS 6 CREDITS	OFF	OFF	ON	ON	OFF	OFF	ON	ON
1 COIN 1 CREDITS 2 COINS 2 CREDITS 3 COINS 3 CREDITS 4 COINS 5 CREDITS	ON	OFF	ON	ON	ON	OFF	ON	ON
1 COIN 1 CREDIT 2 COINS 3 CREDITS	OFF	ON	ON	ON	OFF	ON	ON	ON
1 COIN 1 CREDIT	ON	ON	ON	ON	ON	ON	ON	ON
	COIN SWITCH #1				COIN SWITCH #2			

OPTION SWITCH SETTING — DIP SWITCH #B

OPTION		1	2	3	4	5	6	7	8
TABLE UPRIGHT		OFF ON							
ADVER TISE SOUND	OFF ON		OFF ON						
PLAYER HELICOPTER	3 2 4 FREE			OFF ON OFF ON	OFF OFF ON ON			NOT USE	
SCORE OF ADDITIONAL PLAYER	20000, 70000 120000,170000 50000,100000 150000,200000					OFF ON			
GAME DIFFICULTY	EASY HARD						OFF ON		

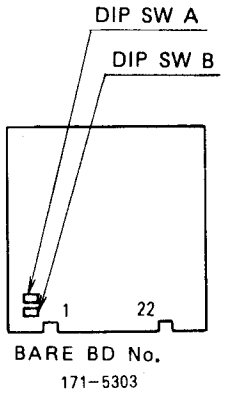

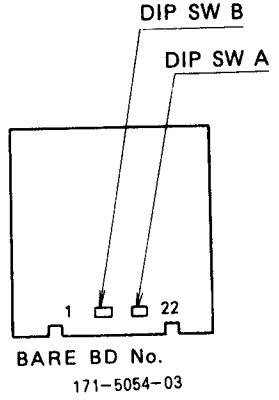

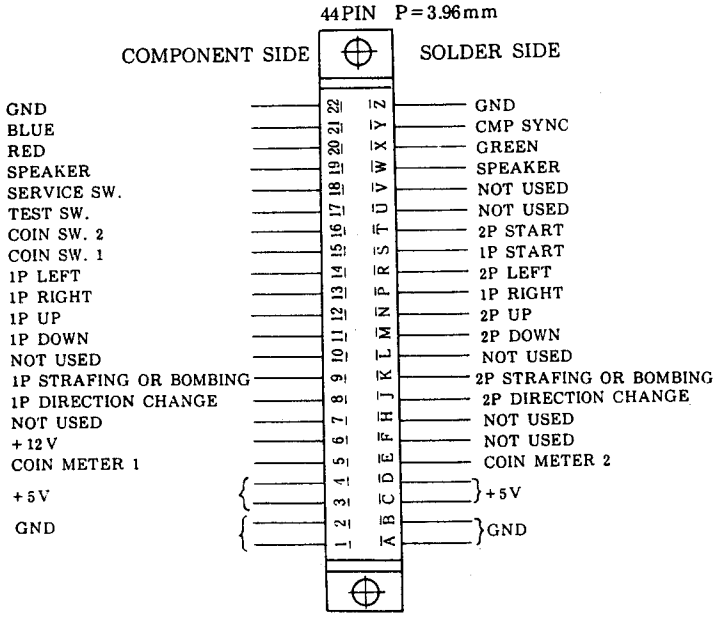

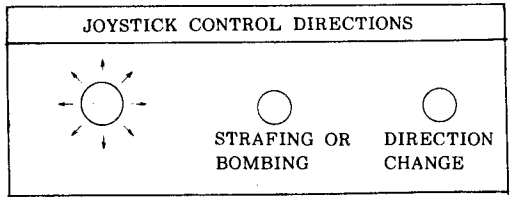

SUPPLY VOLTAGES & CURRENT	
VOLTAGE	CURRENT
DC5V	4.5 A
DC12V	0.25 A

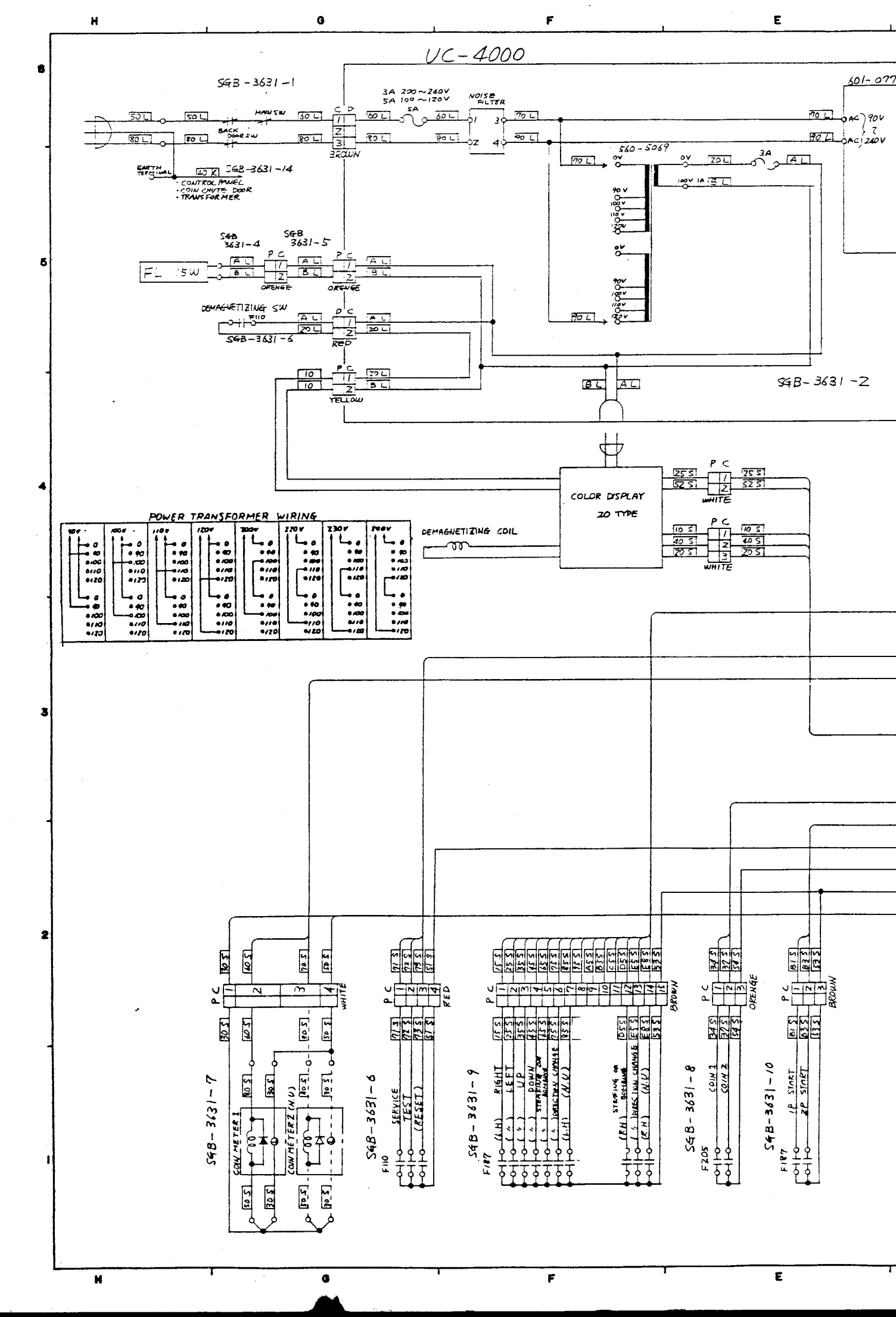
UC-4000
SGB-3631-1
3A 200~240V
5A 100~120V
NOISE FILTER
MAIN SW
BACK DOOR SW
BROWN
EARTH TERMINAL
SGB-3631-14
· CONTROL PANEL
· COIN CHUTE DOOR
· TRANSFORMER
560-5069
SGB 3631-4
SGB 3631-5
FL 15W
ORENGE
DEMAGNETIZING SW
SGB-3631-6
RED
YELLOW
SGB-3631-2
COLOR DISPLAY 20 TYPE
WHITE
DEMAGNETIZING COIL
POWER TRANSFORMER WIRING
SGB-3631-7
COIN METER 1
COIN METER 2 (N.U)
SGB-3631-6
SERVICE
TEST
(RESET)
SGB-3631-9
RIGHT
LEFT
UP
DOWN
STRAFING OR BOMBING
DIRECTION CHANGE
SGB-3631-8
COIN 1
COIN 2
SGB-3631-10
1P START
2P START

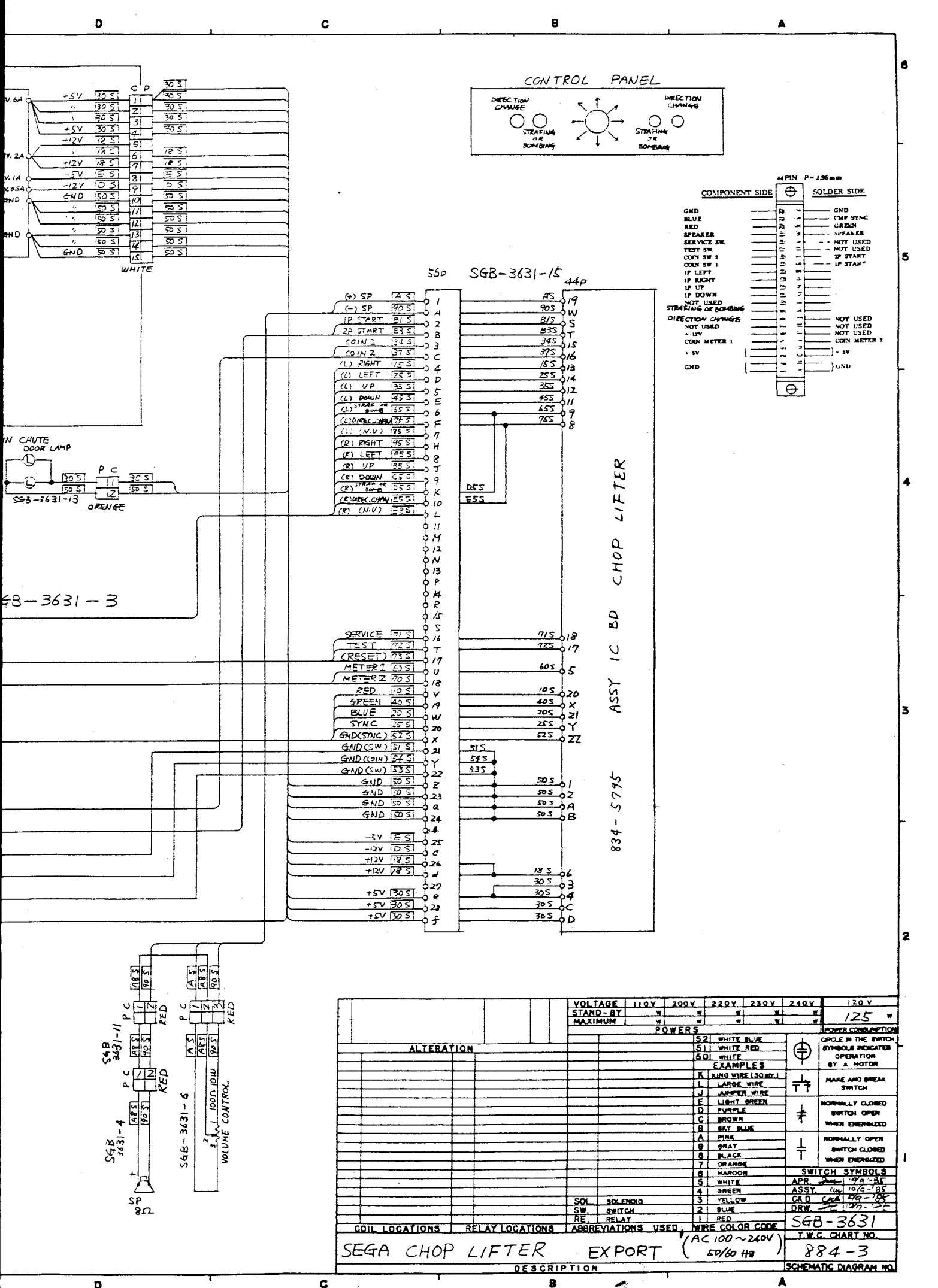
CONTROL PANEL
DIRECTION CHANGE
STRAFING OR BOMBING
DIRECTION CHANGE
STRAFING OR BOMBING
44PIN P=1.96mm
COMPONENT SIDE
SOLDER SIDE
GND
BLUE
RED
SPEAKER
SERVICE SW.
TEST SW.
COIN SW 2
COIN SW 1
1P LEFT
1P RIGHT
1P UP
1P DOWN
NOT USED
STRAFING OR BOMBING
DIRECTION CHANGE
NOT USED
+12V
COIN METER 1
+5V
GND
GND
CMP SYNC
GREEN
SPEAKER
NOT USED
NOT USED
2P START
1P START
NOT USED
NOT USED
NOT USED
COIN METER 2
+5V
GND
WHITE
56P
SGB-3631-15
44P
(+) SP
(-) SP
1P START
2P START
COIN 1
COIN 2
(L) RIGHT
(L) LEFT
(L) UP
(L) DOWN
(L) STRAF OR BOMB
(L) DIREC. CHAN
(L) (N.U)
(R) RIGHT
(R) LEFT
(R) UP
(R) DOWN
(R) STRAF OR BOMB
(R) DIREC. CHAN
(R) (N.U)
SERVICE
TEST
(RESET)
METER 1
METER 2
RED
GREEN
BLUE
SYNC
GND(STNC)
GND(SW)
GND(COIN)
GND(SW)
GND
GND
GND
GND
-5V
-12V
+12V
+12V
+5V
+5V
+5V
D5S
E5S
ASSY IC BD CHOP LIFTER
834-5795
IN CHUTE DOOR LAMP
SGB-3631-13
ORENGE
GB-3631-3
SGB 3631-11
SGB 3631-4
SGB-3631-6
VOLUME CONTROL
100Ω 10W
SP 8Ω
VOLTAGE 110V 200V 220V 230V 240V
STAND-BY W W W W W
MAXIMUM W W W W W
POWERS
120 V
125 W
POWER CONSUMPTION
ALTERATION
52 WHITE BLUE
51 WHITE RED
50 WHITE
EXAMPLES
K KING WIRE (30 mtr.)
L LARGE WIRE
J JUMPER WIRE
E LIGHT GREEN
D PURPLE
C BROWN
B SKY BLUE
A PINK
9 GRAY
8 BLACK
7 ORANGE
6 MAROON
5 WHITE
4 GREEN
3 YELLOW
2 BLUE
1 RED
WIRE COLOR CODE
CIRCLE IN THE SWITCH SYMBOLS INDICATES OPERATION BY A MOTOR
MAKE AND BREAK SWITCH
NORMALLY CLOSED SWITCH OPEN WHEN ENERGIZED
NORMALLY OPEN SWITCH CLOSED WHEN ENERGIZED
SWITCH SYMBOLS
APR. 10/9-'85
ASSY. 10/9-'85
CKD 10/9-'85
DRW. 10/9-'85
SOL. SOLENOID
SW. SWITCH
RE. RELAY
ABBREVIATIONS USED
COIL LOCATIONS
RELAY LOCATIONS
SEGA CHOP LIFTER EXPORT
(AC 100~240V 50/60 Hz)
DESCRIPTION
SGB-3631
T.W.C. CHART NO.
884-3
SCHEMATIC DIAGRAM NO.