| 1 | 2 | 3 | 4 | 5 | 6 |
|---|---|---|---|---|---|
| GREEN | BLUE | Red | L.G. T.R. GREEN | B.T. LACK | BLACK |

TAPE

# 18 HOLE PUTTING CHALLENGE™ MINI-GOLF


ICE

Phone 716-874-5301
Toll Free 800-342-3433
Innovative Concepts in Entertainment Inc. Bflo NY


SION

| MODEL NO. | SERIAL NO. | |
|---|---|---|
| 3000 | 9G206-3PC | |
| VAC | HZ | AMPS |
| 115 V | 50/60 | 7.0 |


*Innovative Concepts in Entertainment Inc.*

Buffalo, New York • (716) 833-0481 • (800) 342-3433 • Fax (716) 833-1342

# NOTES . . .

# PUTTING CHALLENGE™

**WARNING**

This equipment generates, uses, and can radiate radio frequency energy and if not installed and used in accordance with the instructions manual, may cause interference to radio communications. It has been tested and found the comply with the limits for a Class A computing device pursuant to Subpart J of Part 15 of FCC Rules, which are designed to provide reasonable protection against such interference when operated in a commercial environment. Operation of this equipment in a residential area is likely to cause interference in which case the user at his own expense will be required to correct the interference.

**NOTICE**

***PUTTING CHALLENGE*** is a trademark of GL Technology, Inc., Rolling Meadows, IL.

Entire contents of this manual copyright © 1991 Innovative Concepts in Entertainment Inc., Buffalo, New York. *Revision #1* • (716) 833-0481 • (800) 342-3433 • Fax (716) 833-1342

## Contents

Introduction..... 3
Game Description..... 3
Components and Controls..... 4
Game Installation..... 5
Game Testing..... 9
Playing the Game..... 12
Game Pricing..... 12
Adjusting Game Pricing..... 13
Adjusting the Ticket Dispenser..... 15
Accounting Mode..... 16
Using Accounting Mode..... 16
Maintenance Tips..... 18
Troubleshooting..... 19
Questions or Comments..... 21

**KEYS FOR THE COIN DOOR ARE ATTACHED INSIDE THE PODIUM UNDER THE GREEN CONTROL PANEL NEXT TO THE CPU.**

## Introduction

Thanks for purchasing *PUTTING CHALLENGE*! Please read this manual thoroughly before attempting to assemble or operate your game. Failure to read the assembly instructions could lead to mistakes or game damage. If you don't read the instructions before assembly, you might also void your warranty.

## Game Description

For the first time ever, a putting game achieves dramatic realism! *PUTTING CHALLENGE* utilizes a unique, flexible playfield surface. The game's computer adjusts this surface to simulate the contours of real golf greens. Inside the game, a series of unique, motorized actuator pistons can actually alter the playing surface. At computer command, these actuators raise or lower five critical sections of the playfield.

Every time you hit the ball during the game, the ball passes an optical sensor. This detects the ball in the play area. The game computer then expects the ball to go into the hole, roll off the playfield, or remain on the playfield. If the ball goes in the hole, a microswitch senses it. The game computer registers the score, and you'll hear a crowd cheering sound. If the ball rolls off the playfield, it rolls through the return system and rests in the ball ejector cup. Then the game registers points.

If the ball stops on the playfield, the computer recognizes that the ball didn't score. The game computer also senses that the ball didn't fall off the playfield. The game computer responds by altering the playfield surface until the ball rolls off. The game computer then displays the score. During that time, the surface may move to clear the ball. The ball may roll back to the player. If so, a speaker announces: "One-stroke penalty. Player, try again." Then the player must retake his turn.

# Components and Controls

## WARNING

To power this machine, use a grounded, three-prong outlet. You may not know if your outlet is properly grounded. In that case, please don't take chances! Instead, consult a qualified electrician. Failure to use a grounded outlet might cause personal injury or game damage. Furthermore use of non-grounded outlets may void your game's warranty. Also check the voltage rating on your machine. For safety and proper operation, this rating must match the voltage at your power outlet.

## NOTICE

For this game, you need a level floor space of approximately six by eleven feet.

## DESCRIPTION OF GAME COMPONENTS

### MAIN CABINET

The main cabinet is the largest game component. It's the unit that the other components attach to. The main cabinet contains the playfield, cover glass and ball return system.

### DISPLAY CABINET

The display cabinet contains the large, digital readout board. The small "hole number" PC board (on the graphics panel flag) also resides in the display cabinet. Also in the display cabinet, you'll find the power supply and lighting line outlet.

### CONTROL CABINET

The control cabinet contains the GAME-SELECT, PLAYER-SELECT and HOLE-SELECT switches. Here you'll also find the CPU Board and coin door. Your control cabinet might include options too. These include a bill acceptor or ticket dispenser.

### PLATFORM

For player convenience and safety, handrails attach to the platform. During gameplay, the player stands on the platform.

### STEP

The step unit provides easy access to the platform.

## CONTROL LOCATIONS

**POWER ON-OFF**
You can access this toggle switch from the outside of the game. You'll find POWER ON-OFF in a hole at the lower-right corner of the display cabinet.

**TEST BUTTON**
This button is on the CPU Board. This board resides in the control console, on a shelf underneath the control panel. Use the test button when you wish to check accounting totals or make adjustments to the game.

**VOLUME CONTROL**
The volume control is on the CPU Board in the control console.

**OPERATOR CONTROLS**
The GAME, PLAYER, and HOLE SELECT buttons on the control cabinet sometimes assume additional functions. This is the case during the Accounting and Diagnostics Modes. We'll discuss these modes later on.

# Installation

*When you assemble your machine, follow this procedure...*

[ ] 1. Unpack the components from their shipping containers. Identify what they are.

[ ] 2. Place the main cabinet in a position on the floor close to its permanent position. Do this now, because the game will be difficult to move later on.

[ ] 3. Get the parts package from the coinbox in the platform box. In the parts package, locate the allen wrench. Unscrew, and carefully remove the cover glass.

[ ] 4. In the front of the cabinet on the playfield are two allen head bolts. These hold the playfield to the cabinet. Remove these screws and put them in a safe place. Lift the front of the playfield by grasping the ball return cover. Lift up. Temporarily prop up the playfield.

[ ] 5. Locate the control cabinet. Use the same allen wrench to unscrew control panel screws on the front flange. Pull the control panel forward slightly. Lift up. The control panel has a channel on

its back edge. We've designed this channel for insertion onto the cabinet edge. While you install harnesses, use the channel to hold the panel up. You'll find that harness installation is easier this way.

[ ] 6. Move the control cabinet into position next to the main cabinet on the front-right side. Align mounting holes in the main cabinet with those of the control cabinet. Fasten the cabinets together: Use fender washers and the longest of the mounting screws (provided).

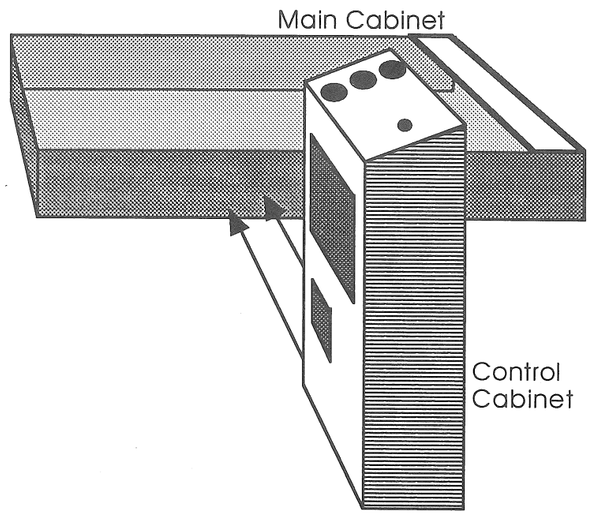


( ) 7. Games built before May '91: Inside the main cabinet you'll notice a cable harness bundle. Feed the wires through the large hole that connects the main and control cabinets. Feed the wires up through the control cabinet on the front-left side. Notice that the shelves in this corner have a longer notch. This longer notch makes feeding the wires easier.

( ) 7A. Games built after April '91: To electronically connect the podium to the main cabinet, locate the 2-16 pin connectors, located near the bottom of the podium at the feed thru hole. Feed it thru, into the main cabinet, and mate it with the connectors, located near the feed thru hole.

**WARNING**
Before proceeding, be sure the game is unplugged!

( ) 8. Install the three Molex® type harness connectors to the CPU Board, if not already connected. Make sure that you install them correctly.

[ ] 9. Stand the platform on its side, with the step edge guard facing up. Place the step on top. Line up the mounting holes. Attach the step and platform with two fender washers and two short screws (provided).

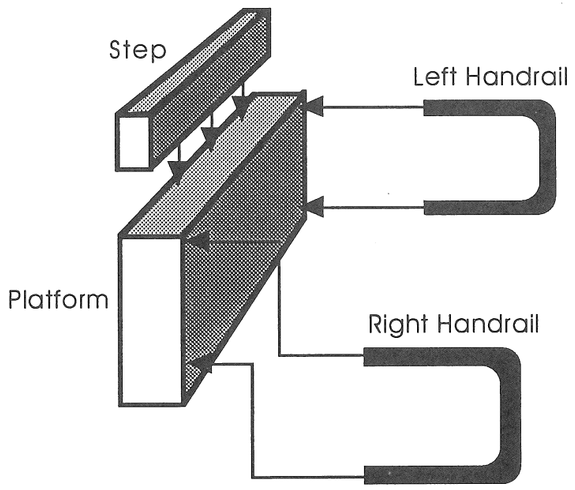


[ ] 10. Slide the handrails into the holes on the platform. Secure them with four long carriage bolts and KEP nuts (provided).

[ ] 11. Place the platform and step assembly by the front of the main cabinet. Find two fender washers and the two longest remaining bolts. To make assembly easier, start from the *inside* of the cabinet front. Now slide the hardware through the holes in the cabinet front. Move the platform into position, leaving a small space between the two units. Look into the space for the platform mounting holes. See that they line up properly. Now start the screws. Push the platform tight up against the main cabinet. Tighten the hardware.

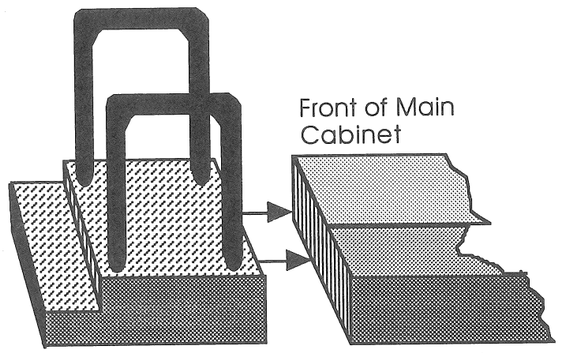


*(For simplicity, control cabinet not shown.)*

[ ] 12. Install the playfield to the cabinet using the two allen head screws removed earlier. Make sure to align the playfield properly before tightening the bolts. The playfield should lie at the same level or very slightly below the platform. If not, loosen the cabinet to platform bolts. Now shim the platform slightly, and re-tighten the bolts. Align the playfield and tighten the hardware.

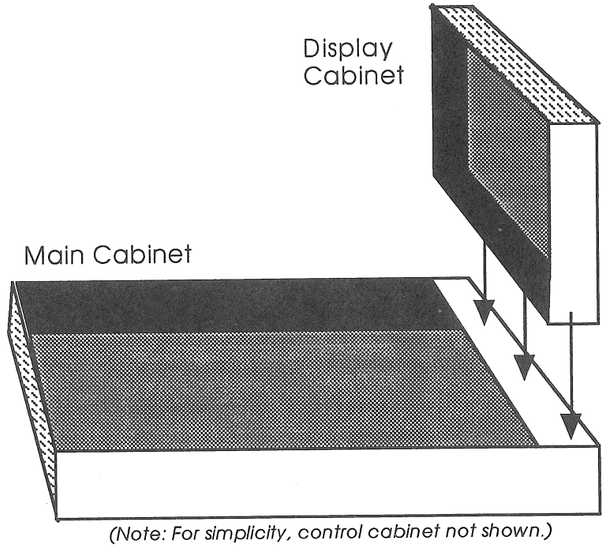


*(Note: For simplicity, control cabinet not shown.)*

[ ] 13. Set the display cabinet atop the rear of the main cabinet. Remove the two square drive screws from the graphics panel with the square drive bit (provided). Carefully remove the graphics panel.

[ ] 14. Fasten the display cabinet to the main cabinet with two fender washers and bolts (provided).

**WARNING**
Before proceeding, be sure the game is unplugged from the main cabinet!

[ ] 15. Connect the three-prong power plug into the display cabinet's duplex outlet box (provided). (One plug should already be connected at this location.) Reach into the main cabinet and pull out the Molex connector. Connect the Molex connector to the power supply.

[ ] 16. Get the display panel. Plug in the display panel connectors at the bottom of the PC board.

[ ] 17. Slide the display panel into position. Secure the panel with the two square drive screws. Be careful not to pinch wires between the panel and the frame.

[ ] 18. Install the cover glass and secure it with the six bolts and washers provided.

[ ] 19. Plug the game in and turn on the power. Listen for unusual sounds. Be sure the game works okay. If the game seems fine, then proceed. Otherwise see the Troubleshooting section or call our service department at 1 (716) 833-0481.

Select game options and pricing as described in this book's section on *Game Adjustments.* After completing game setup and adjustment, close the control panel. Secure it with screws (provided).

## Game Testing

[ ] 1. Be sure a ball is in the game. Test procedures require that a ball is in the game. Check to see that all components are connected or plugged in.

[ ] 2. Turn on AC power.

[ ] 3. Enter Test Mode by pushing the TEST button on the main PC board. TEST is inside the control cabinet.

[ ] 4. Push the HOLE SELECT button.

- Playfield actuators should move up and down in sequence.

- One by one, all seven-segment displays should light. The hole display lights first.

- Watch the actuators. All five should go up and down in sequence at least five times.

- Watch the segments on the displays. Only one segment should light at a time. This segment test helps you check for short circuits between segments.

- Check the playfield. It should vibrate when the center actuator moves to the upper position.

- Check for periodic ball ejection. *(For this mode to work correctly, the ball must be in the game!)* The ball doesn't eject, or the machine ejects the ball off the platform: See "Ball Ejects Too Strongly or Too Weakly," in the *Troubleshooting* section.

- Push TEST and watch the large display. The game leaves Test Mode. All segments and bulbs should light, indicating normal game operation.

[ ] 5. Push TEST. The game enters Test Mode.

[ ] 6. Next, we'll examine factory settings. Push GAME SELECT. A ".1" appears at the top of the large display. Simultaneously a "4" appears at the bottom of the display. Advance to the next number by pressing GAME SELECT. Here's the sequence of "." numbers...

.1 and 4

.2 and 1

.3 and 4

.4 and a variable: *Variable should match credits shown on the console display.*

.5 and 1

.6 and 1

.7 and 1

.8 and 0

.9 and 1

These are the factory settings. These numbers may differ from settings on your machine. If so, you may adjust your machine to match the above numbers. (Or you can adjust game performance to your location by altering these numbers. See the *Game Pricing* and *Ticket Dispenser* sections that follow.)

[ ] 7. Exit Test Mode by pressing TEST.

[ ] 8. Check to see that there's a battery in the main PC board. Now press both coin switches, or run coins through the mechanisms. Watch the credits display. With the game set for $1 per credit, inserting four coins should buy one credit. Every additional four coins should purchase four more credits.

[ ] 9. Adjust the machine's sound level.

[ ] 10. *Machines with bill validators only:* Insert a $5 bill in the bill validator. Watch the credits display. With the game set for $1 per credit, every $5 should buy five credits.

[ ] 11. Turn AC power off and on again. Credits should remain in memory. If the game tests okay, continue.

*Now you'll want to try some different games to make sure the machine operates correctly. You can choose among three game types...*

## GAME 1: TOTAL STROKES

In this game, players take turns hitting the ball. They try to get the lowest score, based on the following rules...

- 1 point for sinking a hole in 1
- 2 points for leaving the ball on the green
- 3 points for hitting the ball off the green

If the ball returns to the player, the game invokes a one-stroke penalty. After each player takes his turn, the ball automatically ejects a ball for the next player. If the ball falls back in the hole, the game automatically re-ejects it. After players complete their turns on one hole, the playfield changes shape for the next hole. Players may choose to play nine or eighteen holes. The game ends after players have completed all holes.

### GAME 2: HOLE-IN-ONE
This game resembles Game 1: Total Strokes. However in Game 2, players only receive a point for a hole-in-one. The object is to attain the highest score.

### GAME 3: PICK-A-PUTT
This is a practice game. The object of the game is to sink as many balls as possible. Players also use this game to brush up on technique. A player selects a nine or eighteen-hole game. Then he chooses a green to putt on. He may shoot all the balls at the same green. Or he may spread the balls out over different greens.

## Playing the Game

To play a game, players begin by inserting money. A player needs one credit for a nine-hole game, or two credits for an eighteen-hole game. (The number of coins per credit is operator selectable.)

### CONTROL PANEL
Next, the game computer displays the number of credits available on the control panel's readout. The player then chooses the desired game, number of players and number of holes. When players push buttons, the game computer lights an LED beside the current selection. After players complete their selections, they press the START button and begin playing.

## Game Pricing

Standard *PUTTING CHALLENGE* machines have two coin mechanisms in their coin doors. Games with options may include a dollar bill acceptor, ticket dispenser, or both. You may adjust pricing to suit your operation and customers. Here are your options...

- One through eight coins for one credit
- Four coins for one credit (factory setting)
- Freeplay

If you have two coin mechanisms, you can set each differently. First adjust the coins per credit setting for Mechanism 1. Then enter the different settings for Mechanism 2. If you desire Mechanisms 1 and 2 to have the same settings, set Mechanism 1 and do nothing to Mechanism 2. The game's computer will adjust Mechanism 2 identically to Mechanism 1's setting.

You can also set the bill acceptor for various credits...

- One bill for four credits
- One bill for three credits
- One bill for two credits
- One bill for one credit (factory setting)
- One bill for one-half credit

### WHAT ARE CREDITS?

The game computer has its own standard currency known as credits. Your pricing adjustment sets the "exchange rate" or how many coins buy a credit. At the factory setting (default), one credit is four coins. That is, four coins buy one player a nine-hole game of golf. Eight coins would then buy him an eighteen-hole game of golf.

## Adjusting Game Pricing

### CAUTION

Pushing the TEST button cancels any game in progress.

To enter Game Pricing Mode, first open the control panel. On the CPU Board is a test button. Be sure you've turned on the game. Press the TEST button. A decimal point at the top of the display panel lights, indicating the Test Mode. Press the GAME SELECT button. The display changes to a "1." This indicates that you're in the Game Pricing Mode, and ready to begin.

*The following describes what the numbers mean, and how to adjust them.*

## 1. NUMBER OF COIN #1's PER CREDIT

This figure represents coins per credit for the left coin chute in a two-chute door. Or, this figure can represent coins per credit in a one-chute door. Look for a number in the bottom display. This number shows how many coins players need to get one credit. To change this amount, repeatedly press PLAYER SELECT until the desired number of coins appears. Pressing "0" causes the machine to enter its Freeplay Mode. When finished, press GAME SELECT to advance to the next option. (To return the game to normal operation, press TEST anytime.)

0 = Free play

## 2. NUMBER OF COIN #2's PER CREDIT

With a two-chute coin door, this figure represents the right coin chute's credit setting. (The figure *isn't used* with single-chute doors.) Notice the number at the bottom of the display. This number is a multiplier for the Coin #1 setting. Example: You set Coin Chute #1 to four coins. The bottom display number (credits) should be a "1." Here's why: 4 x 1 = 4 coins per credit for Chute #2. Normally, you'll set Pricing Adjustment 2 to "1." However, you may use other settings for foreign or special purposes. *If you have a special use, contact our service department for the correct settings.* To change Pricing Adjustment 2 , repeatedly press PLAYER SELECT until the desired number appears. When finished with Adjustment 2, press GAME SELECT to advance to the next option. (To return the game to normal operation, press TEST anytime.)

0

## 3. NUMBER OF CREDITS PER BILL

This figure represents the number of credits per one-unit (dollar) bill. The number at the bottom of the display panel shows the number of credits per unit. To change this, press PLAYER SELECT. Pressing "0" shuts the accepting mode off. When finished, press GAME SELECT. (Some machines have bill acceptors that accept more than one unit, that is, dollar bills. Games with these acceptors multiply credits by units. Example: One dollar buys one credit; five dollars, five credits.)

0

## 4. CURRENT CREDITS

This figure represents the number of credits currently in memory. Use this feature to remove or add credits to this number. You can also use this feature to provide a one-time freeplay. With Feature 4, you can add credits without changing the coins per credit function. Here's how: The game computer displays credits at the bottom of the control panel. Adjust them by pressing PLAYER SELECT. When finished, proceed to the next feature by pressing GAME SELECT.

# Adjusting the Ticket Dispenser

## 5. GAME #1: 1-PUTT TICKETS

This feature adjusts the number of tickets dispensed per hole-in-one for Game 1 (Total Strokes). The game computer posts the number of tickets on the bottom display. To adjust Feature 5, press PLAYER SELECT. Pressing "0" disables the dispensing function. When finished, proceed to the next feature by pressing GAME SELECT.

## 6. GAME #1: TICKETS FOR BALLS ON THE GREEN

This feature adjusts the number of tickets dispensed for balls remaining on the green in Game 1 (Total Strokes). The game computer posts the number of tickets on the bottom display. To adjust Feature 7, press PLAYER SELECT. Pressing "0" disables the dispensing function. When finished, proceed to the next feature by pressing GAME SELECT.

## 7. GAME #2: 1-PUTT TICKETS

This feature adjusts the number of tickets dispensed per hole-in-one for Game 2 (Hole-in-One). The game computer posts the number of tickets on the bottom display. To adjust Feature 6, press PLAYER SELECT. Pressing "0" disables the dispensing function. When finished, proceed to the next feature by pressing GAME SELECT.

## 8. GAME #3: PICK-A-PUTT TICKETS

This feature adjusts the number of tickets dispensed per hole-in-one for Game 3 (Pick-A-Putt). The game computer posts the number of tickets on the bottom display. To adjust Feature 7, press PLAYER SELECT. Pressing "0" disables the dispensing function. When finished, proceed to the next feature by pressing GAME SELECT.

## 9. GAME #1: 2-PUTT TICKETS

Use this option to dispense tickets to players who normally can't get tickets during the game. Feature 9 can be helpful if your customers are children or newcomers to the game. Also, some locations want the machine to dispense tickets regardless of score. The game computer posts the number of tickets on the bottom display. To adjust Feature 9, press PLAYER SELECT. Pressing "0" disables the dispensing function. When finished, proceed to the next feature by pressing GAME SELECT. To exit Ticket Mode and return to Play Mode, press TEST. (You'll find the TEST button on the CPU Board.)

## Accounting Mode

Because *PUTTING CHALLENGE* is computer controlled, it can provide a history of game activity. We call this characteristic the "Accounting Mode." Accounting Mode supplies useful information about gameplay on your machine. For instance...

- How many games have people played at this machine?
- How many games did people play here in the last week?
- How many people play at once?
- How many one, two, three or four-player games did people play?
- What types of game were people playing? (How many Game 1: Total Strokes, Game 2: Hole-in-One and Game 3: Pick-A-Putt did they play?)

**CAUTION**
Pushing the TEST button cancels any game in progress.

## Using Accounting Mode

Be sure your machine is on. Open the control panel and press TEST. (You'll find the TEST button on the CPU Board.)

When you press TEST, a decimal point appears on the top display. Push PLAYER SELECT. Now a "1.1" appears on the top display. This figure indicates the game computer's entry into Accounting Mode.

### 1.0 TOTAL CREDITS SINCE CREATION

This figure represents the total number of credits registered on the game. The game computer began counting this number when you last replaced the CPU Board battery. *(You may be still using the original battery. In that case, this number represents total credits since the game began operation.)* After viewing this number, proceed to the next feature by pressing GAME SELECT. *(To exit Accounting Mode, press TEST.)*

## 1.1 TOTAL CREDITS SINCE LAST CLEAR

This figure represents the total credits since you last cleared credits from memory. Use Feature 1.2 as a weekly, monthly, or periodic resettable device. Feature 1.2 makes finding out how the game is earning and verifying cashbox coin count easier. You can reset this feature by pressing PLAYER SELECT. Proceed to the next feature by pressing GAME SELECT.

## 1.2 NUMBER OF GAME #1 PLAYS

This figure represents the number of "Total strokes" games played since the last time you reset Feature 1.3. You can reset this feature by pressing PLAYER SELECT. Proceed to the next feature by pressing GAME SELECT.

## 1.3 NUMBER OF GAME #2 PLAYS

This figure represents the amount of "Hole-in-One" games played since the last time you reset Feature 1.4. You can reset this feature by pressing PLAYER SELECT. Proceed to the next feature by pressing GAME SELECT.

## 1.4 NUMBER OF GAME #3 PLAYS

This figure represents the number of "Pick-A-Putt" games played since the last time you reset Feature 1.5. You can reset this feature by pressing PLAYER SELECT. Proceed to the next feature by pressing GAME SELECT.

## 1.5 NUMBER OF 1-PLAYER PLAYS

This figure represents the number of one-player games played since the last time you reset this feature. You can reset this feature by pressing PLAYER SELECT. Proceed to the next feature by pressing GAME SELECT.

## 1.6 NUMBER OF 2-PLAYER PLAYS

This figure represents the number of two-player games played since the last time you reset this feature. You can reset this feature by pressing PLAYER SELECT. Proceed to the next feature by pressing GAME SELECT.

## 1.7 NUMBER OF 3-PLAYER PLAYS

This figure represents the number of three-player games played since the last time you reset this feature. You can reset this feature by pressing PLAYER SELECT. Proceed to the next feature by pressing GAME SELECT.

### 1.8 NUMBER OF 4-PLAYER PLAYS

This figure represents the number of four-player games played since the last time you reset this feature. You can reset this feature by pressing PLAYER SELECT. Proceed to the next feature by pressing GAME SELECT.

*To review Accounting Mode, repeatedly press GAME SELECT. To exit Accounting Mode, press TEST.*

## Maintenance Tips

Your collections depend on how well you maintain your game. It's a fact! Well-maintained games earn more and earn longer!

Fortunately, *PUTTING CHALLENGE* is easy to care for. Maintaining you game is pretty much a matter of common sense. Here are a few pointers to get you started...

•**CLEAN THE GLASS.** Keep the cover glass clean by wiping with a glass cleaner. Follow that with a furniture polish (we recommend Pledge™). You could also use a special plastic polish available from us, ICE Inc. The polish is important. It protects the plastic against haze and aging. Machine buffing can remove scratches that aren't too deep: Be sure to use a scratch remover available from ICE.

•**VACUUM THE PLAYFIELD**, platform and steps regularly. Vacuuming keeps dust from fouling the ball return. Vacuuming also keeps your game looking clean and new...and attractive to players!

•**REPLACE WORN CARPETING.** Use only carpet supplied by ICE! Other carpet materials work poorly with the game. (Common carpet types may cause the ball to stick on the playfield.) Follow instructions provided in the replacement carpet kit.

•**INSPECT THE HANDRAILS.** Regularly check the handrails. If necessary, tighten them.

•**REPLACE MEMORY BATTERY.** Every five years, replace the CPU Board battery. Use only the same type and size battery.

•**LUBRICATE ACTUATORS.** Occasionally lubricate the actuator pivot points with a good grade machine oil. Also lightly grease the rub pads on the bottom of the playfield.

•**MAINTAIN GAME LIGHTING.** Light bulbs illuminate the playfield, display cabinet, display panel and buttons. Some of these bulbs indicate game functions. Your game's operation and attractiveness depend on these bulbs. After all, without indicator lamps, no one can play the game! The game uses four types of light bulbs...

| Bulb Location | Bulb Type |
|---|---|
| •Console Buttons and Coin Chutes | #194, 12-volt bulbs |
| •Display Cabinet | #F20T12/CW, 120-volt bulbs |
| •Display PC Board | #161, 12-volt bulbs |
| •Main Cabinet Lighting | #F40/CW, rapid start 120-volt bulbs |

# Troubleshooting

This section describes problems along with their probable solutions. Solutions appear in this order: Most likely *first,* least likely *last.* We also describe assembly or replacement.

## CAUTION

When working on the machine, be extremely careful with the electonics. Misconnections ***or even meter probes*** can easily damage electronic parts. Don't attempt any repair until you're sure of the correct solution. If you have any questions, call our service department before proceeding!

### •*SYMPTOM: BALL WON'T EJECT*

| Possible Problem | Solution |
|---|---|
| Bad solenoid | Replace solenoid |
| Bad or dirty ball sensor | Clean or replace sensor |
| Dirt in tray or ball tube | Clean ball tray and tube |
| Bad solenoid driver | Replace driver |
| Bad CPU Board | Repair CPU Board |
| Bad connector or harness | Repair harness or connector |
| Loose solenoid | Tighten screws: *Use thread-locking compound* |
| Bad power supply | Repair power supply |
| Ball eject adjusted too low | Adjust to proper setting |

## ACCESS TO THE BALL-FEED SOLENOID

( ) 1. Remove the screws and washers that retain the cover glass.

( ) 2. Remove the glass.

( ) 3. Remove the two long screws that retain the playfield. You'll find these screws at the front of the playfield.

( ) 4. Lift the back of the playfield. Disconnect the four-pin connector for the shaker motor and hole microswitch.

( ) 5. Carefully remove the playfield.

( ) 6. Loosen the band clamp on the ball-return pipe. Slide the return pipe out of the tee fitting.

( ) 7. Disconnect the three-pin connector on the optical PC Board. Remove the two fast-on connectors from the solenoid coil.

( ) 8. Lift the solenoid assembly up. You now have access to the solenoid and optical detector.

( ) 9. To reassemble the game, reverse this procedure.

## EJECTOR ASSEMBLY MAINTENANCE

When a ball falls into the ejector cup, the ball must trigger the optical sensor. Periodically clean the sensor assembly with a clean, damp cloth. Pay particular attention to the optical LED's. Make sure that they're dirt-free and unobstructed!

To clean the tray and the tube, first remove the tray. Then clean the outside of the game. There may be debris in the tube. Clean it out! Wrap a rag around a coat hanger and push it through the pipe. (If you don't have a coat hanger, then any stiff wire will do fine.) You can also blow debris out of the tube if you have a shop vac. Set the hose on exhaust, insert other end of the hose into the ejector pipe. This will blow any dirt, etc. into the ball return tray, where it can be easily vacuumed out.

## •SYMPTOM: ACTUATORS DON'T WORK

| Possible Problem | Solution |
|---|---|
| Worn motor brushes | Replace motor |
| Worn gearbox or bad gear teeth | Replace gearbox |
| Loose hardware | Tighten hardware: *Use thread-locking compound* |
| Bad Sensor Board | Replace board |
| Bad CPU Board | Repair board |
| Bad harness | Repair harness |
| No lubrication; bad pivot points | Replace parts and be sure to lubricate them! |

## CAUTION

**REPLACING ACTUATORS.** Make sure that you replace actuators in the correct positions! Otherwise, you might damage the playfield. Notice that the actuators have two different height settings. Return actuators with a ***three-inch rise*** to the front of the machine. Those with a ***four-inch rise*** go in the middle and rear. The front of the game is the end closest to the player.

## NOTICE

**ACTUATOR HEIGHT CONVERSIONS.** ICE, Inc. can easily assist you in converting a lifter for either height that your machine uses. For more information, call our service department. See ***Questions or Comments.***

## ACCESS TO PLAYFIELD ACTUATORS

( ) 1. Remove the screws and washers that retain the cover glass.

( ) 2. Remove the glass.

( ) 3. Remove the two long screws that retain the playfield. You'll find these screws at the front of the playfield.

( ) 4. Lift the back of the playfield. Disconnect the four-pin connector for the shaker motor and hole microswitch.

( ) 5. Carefully remove the playfield. Removing the playfield exposes the front playfield actuators for service.

( ) 6. To gain access to rear actuators, remove the tray retaining screw and tray.

( ) 7. To reassemble the game, reverse this procedure.

### •SYMPTOM: GAME DOESN'T RECOGNIZE BALL IN PLAY

| Possible Problem | Solution |
|---|---|
| Misaligned optical detector | Check alignment. Verify it by lit LED on the receiver. * |
| Bad optical detector * | Replace detector |
| Bad CPU Board | Repair board |

**Call our service department for additional information.*

Check detector covers for obstructions. Blocked detectors may not work correctly. Also, be sure that the playfield is firmly attached. Check playfield alignment, too: Can detectors see through the cover openings?

### •SYMPTOM: BALL EJECTS TOO STRONGLY OR TOO WEAKLY

You can easily adjust ball-ejection power. On earlier machines, the adjustment is on a rheostat near the ejector unit. On later models, the rheostat is on the power supply. In both cases, reduce ejection power by turning the rheostat counterclockwise. Turning clockwise increases power. The ball should eject between six and eighteen inches from the hole.

### •SYMPTOM: GAME DOESN'T HOLD CREDITS OR RETAIN MONEY AND TICKET SETTINGS

The battery on the CPU Board is probably worn out. Replace it with the same size and type, and reset the machine. Try to replace the battery *before* it's worn out. In that case, the game retains memory long enough for the battery to be changed. We recommend that you replace the battery at least every five years.

## Questions or Comments

If you have questions or comments, please call our service department. Phone 1 (800) 342-3433 or 1 (716) 833-0481.

# NOTES . . .

## PUTTING CHALLENGE SPARE PARTS LISTINGS

| | |
|---|---|
| PC 10004X | ACTUATOR ASSEMBLY |
| PC 10004 | ACTUATOR MOUNTING BRACKET |
| PC 10005X | ACTUATOR PUSH ROD |
| PC 10006 | ACTUATOR SENSOR DISC |
| PC 10007 | ACTUATOR PISTON |
| PC 10008 | ACTUATOR PISTON BEARING |
| PC 10009A | ACTUATOR SWING ARM ASSEMBLY |
| PC 10010 | STEP GUARD EDGING |
| PC 10015X | SOLENOID BALL CUP |
| PC 20201 | ACTUATOR GEARMOTOR |
| PC 20203 | 48'' FLUORESCENT LIGHT BALLAST (OLD STYLE) |
| PC 20203C | 48'' FLUORESCENT LIGHT BALLAST (NEW STYLE) |
| PC 20205 | BULB LOCKS |
| PC 20206 | BULB SOCKET, REGULAR |
| PC 20206A | BULB SOCKET, INTERRUPT |
| PC 20218 | GAME SELECT BUTTON |
| PC 20219 | PLAYER SELECT BUTTON |
| PC 20220 | HOLE SELECT BUTTON |
| PC 20221 | START SELECT BUTTON |
| PC 20222 | BALL CUP MICRO SWITCH |
| PC 20222A | BALL CUP MICRO SWITCH BRACKET |
| PC 20224 | GAME COUNTER |
| PC 20225 | EJECTOR SOLENOID WITH PLUNGER |
| PC 20225A | EJECTOR SOLENOID PLUNGER ONLY |
| PC 2007 | SPEAKER |
| PC 20228 | VIBRATOR MOTOR |
| PC 20348X | EMITTER/RECEIVER CABLE |
| PC 20349X | CARPET CABLE |
| PC 20394X | BALL EJECT ASSEMBLY SENIOR (WITH SOL.) |
| PC 20394XA | BALL EJECT ASSEMBLY JUNIOR (W/O SOL.) |
| PC 20400 | 74LS04 I.C. |
| PC 20401 | 5821A I.C. |
| PC 20402 | 4093 I.C. |
| PC 20403 | L298N |
| PC 20404 | 74HC14N I.C. |
| PC 20405 | LM358 SOUND AMP I.C. |
| PC 20406 | 27512 E-PROM GOLF SOUND |
| PC 20407 | BATTERY 3 VOLT CR2025 |
| PC 20408 | MAN 6610 7 SEGMENT DISPLAY |
| PC 20409 | MAN 6910 7 SEGMENT DISPLAY |
| PC 20410 | 5K VOLUME POTENTIOMETER |
| PC 20411 | .250 MALE FAST-ON |
| PC 20415 | 68705 SOUND CHIP 1.0 |
| PC 20416 | 68705 LOGIC CHIP 5.3 |
| PC 20421 | BRIDGE RECTIFIER (BR2) VJ048M |
| PC 20422 | BRIDGE RECTIFIER RB151-ND |
| PC 20423 | IRF 540 |
| PC 20424 | F1 FUSE - 10 AMP |
| PC 20425 | F2 FUSE - 10 AMP |
| PC 20426 | 10,000 MFD, 25 VOLT ELECT. CAPACITOR |
| PC 20427 | 10,000 MFD, 50 VOLT ELECT. CAPACITOR |
| PC 20428 | POWER SUPPLY TRANS. 110 VOLT 4-42-8400 |
| PC 20429 | RED L.E.D. (INDIVIDUAL FOR DISP.P.C.B.) |
| PC 20430 | 100 OHM WIRE WOUND RESISTOR |
| PC 20431 | RESISTOR NETWORK, 1K 760-3-R1K |
| PC 20432 | 4 MHZ QUARTZ CRYSTAL |
| PC 20433 | OPTOISOLATOR OPB742 |
| PC 20434 | TIP 120 SWITCHING TRANSISTOR |
| PC 20435 | VOLTAGE REGULATOR |
| PC 20436 | RESISTOR NETWORK 560 OHM |
| PC 30302X | GOLF CLUB ASSEMBLY |
| PC 30302 | GOLF CLUB WITH MOUNTING HOLE |
| PC 30303X | PLAYFIELD COVERGLASS ASSEMBLY |
| PC 30304X | DISPLAY PANEL ASSEMBLY |
| PC 30306X | PLAYFIELD ASSEMBLY SENIOR (ALL COMP.) |

| | |
|---|---|
| PC 30306XA | PLAYFIELD ASSEMBLY JUNIOR (REPLACEMENT) |
| PC 30308 | ACTUATOR WEAR PADS |
| PC 30309 | BALL CUP |
| PC 30310 | BALL RETURN TRAY |
| PC 30318 | I.R. EMITTER COVER |
| PC 30319 | I.R. RECEIVER COVER |
| PC 30321 | 48'' FLUORESCENT LIGHT COVER |
| PC 30322XA | STEP GRASS ASSEMBLY (W/ADHESIVE) |
| PC 30323XA | PLATFORM GRASS ASSEMBLY (W/ADHESIVE) |
| PC 30328 | Z CHANNEL (LIGHT COVER SUPPORT) |
| PC 50502 | CASH BOX |
| PC 50507 | SPEAKER GRILLE |
| PC 50508 | 3/16 VINYL COATED CABLE, 5 FEET (CLUB) |
| PC 60601 | COVER GLASS BOLT, 1/4-20 X 1 1/4 |
| PC 60601A | ALLEN WRENCH, COVER GLASS BOLT |
| PC 60602 | 1/4-20 X 1 1/4 SOCKET HEAD, BOLT |
| PC 60603 | 10-24 X 1/2 SHCS |
| PC 60604 | 1/4-20 NYLOCK NUT |
| PC 6006 | 1/4 X 3/8, 10-24 THREAD SHOULDER BOLT |
| PC 60606 | 8-32 X 3/8 ALLEN HEAD SET SCREW |
| PC SK613 | #8 STAR WASHER |
| PC 3008 | 1/4 X 1/2 X .060 PLASTIC WASHER |
| PC 6004 | 8-32 X 1/2 MACHINE SCREW |
| PC 655 | #8 X 3/4 SQUARE DRIVE SCREW |
| PC 60615A | #8 SQUARE DRIVE BIT |
| PC 60617 | 1/4 -20 X 4 PHILLIPS HEAD BOLT |
| PC 60622 | 1/4-20 X 1 CAP SCREW, ALLEN HEAD |
| PC 3036 | COVER GLASS BOLT WASHER |
| PC 60625 | 3'' HOSE CLAMP |
| PC 60626 | 6-32 X 3/4 PEM STUD |
| PC 6005 | 8-32 X 1/4 PHILLIPS HEAD MACHINE SCREW |
| PC 60631 | CABINET INSERT, 1/4-20 |
| PC 60632 | PLASTIC FEET |
| PC 60633 | O RING |
| PC 60636 | 1/4-20 X 3 ALLEN HEAD BOLT (PLAYFIELD) |
| PC 60637 | 5/16-18 X 3 1/2 CARRIAGE BOLT (RAILING) |
| PC 60638 | 5/16-18 KEP NUT (RAILING) |
| PC 60641 | 6-32 X 5/8 HEX HEAD SPACER |
| PC 60642 | 6-32 X 3/8 HEX HEAD SPACER |
| PC 60647 | 8-32 NUT |
| PC 60648 | 1/8'' SPACER TUBE |
| PC 60650 | 1/4'' CAST EYE BOLT (GOLF CLUB) |
| PC 60653 | FERRULES, CABLE CLAMP |
| PC 60656 | EYE BOLT PUSH NUT (GOLF CLUB) |
| PC 70701 | GOLF BALL DECAL |
| PC 70702 | ''PUTTING'' DECAL |
| PC 70702A | ''CHALLENGE'' DECAL |
| PC 70706 | ''HAZARD AREA'' DECAL |
| PC 70707 | ''AUTOMATIC BALL RETURN'' DECAL |
| PC 70710 | SERVICE MANUAL |

## ELECTRONIC PARTS LISTINGS

| | |
|---|---|
| PC 20229 | ACTUATOR P.C. BOARD |
| PC 20230 | I.R. RECEIVER P.C. BOARD |
| PC 20231 | I.R. EMITTER P.C. BOARD |
| PC 20232 | POWER SUPPLY P.C. BOARD |
| PC 20233 | HOLE DISPLAY |
| PC 20234 | MAIN P.C. BOARD |
| PC 20235 | DISPLAY P.C. BOARD |
| PC 20236 | CONSOLE P.C. BOARD |
| PC 20394 | BALL EJECT P.C. BOARD |

(ALL OTHER ELECTRONIC PARTS LISTED IN MAIN LIST IN 20000 SERIES.)

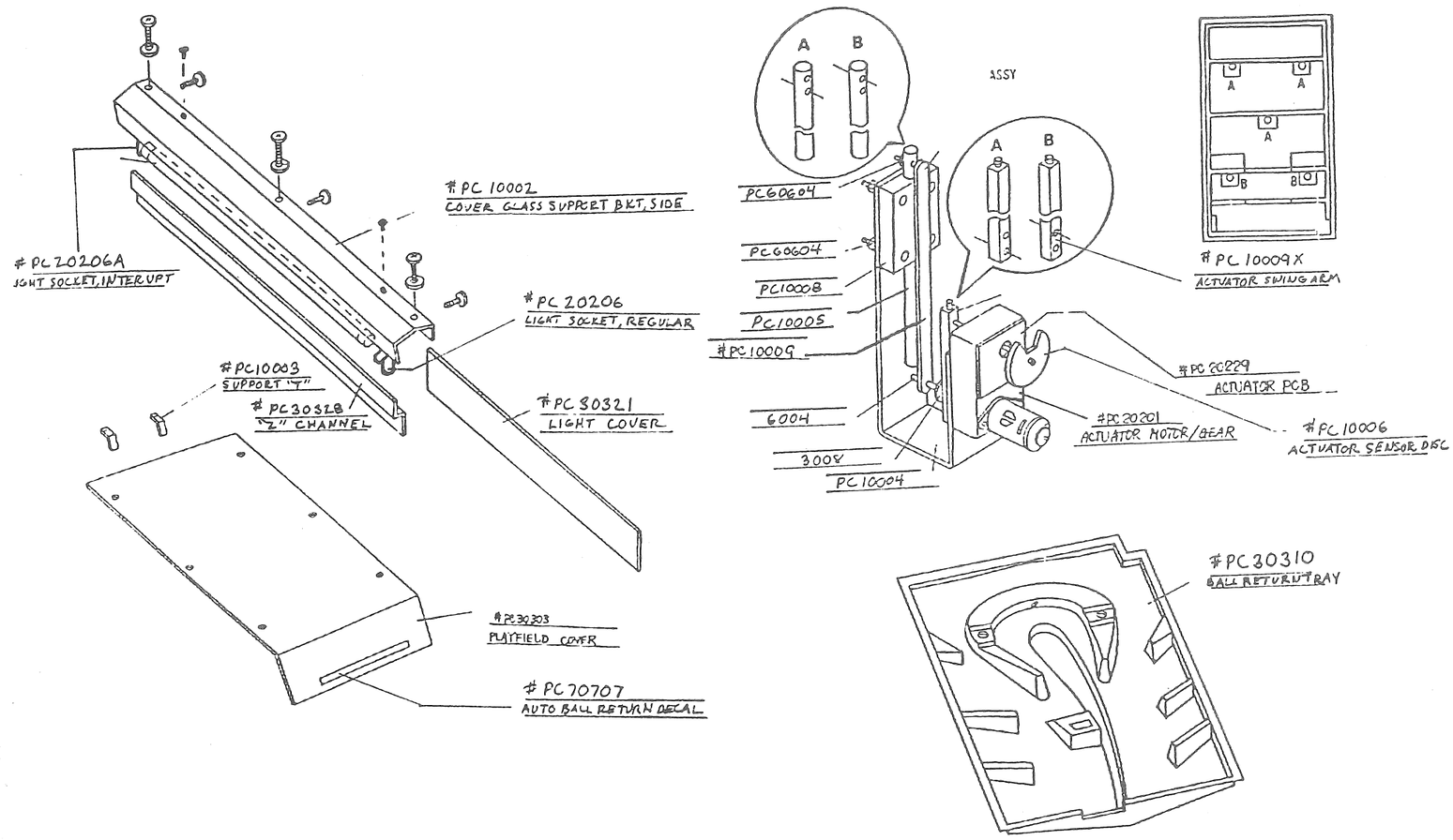
#PC 20206A
LIGHT SOCKET, INTERUPT
#PC 10002
COVER GLASS SUPPORT BKT, SIDE
#PC 20206
LIGHT SOCKET, REGULAR
#PC10003
SUPPORT "T"
#PC 30328
"L" CHANNEL
#PC 30321
LIGHT COVER
#PC 30303
PLAYFIELD COVER
#PC 70707
AUTO BALL RETURN DECAL
A
B
ASSY
PC60604
PC60604
PC10008
PC10005
#PC10009
600H
300H
PC10004
#PC 20201
ACTUATOR MOTOR/GEAR
#PC 10009X
ACTUATOR SWING ARM
#PC 20229
ACTUATOR PCB
#PC 10006
ACTUATOR SENSOR DISC
#PC 30310
BALL RETURN TRAY

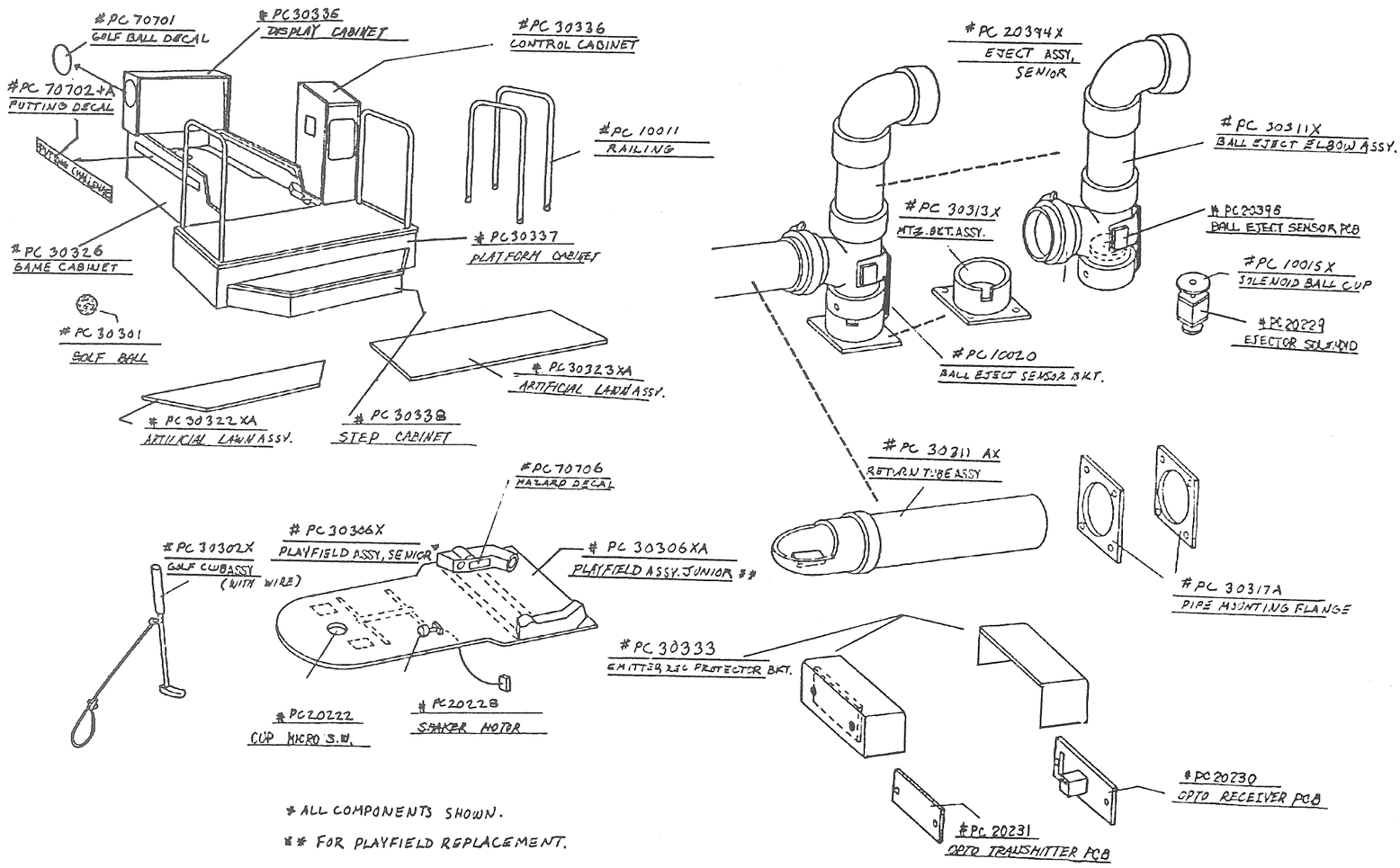


* ALL COMPONENTS SHOWN.

** FOR PLAYFIELD REPLACEMENT.

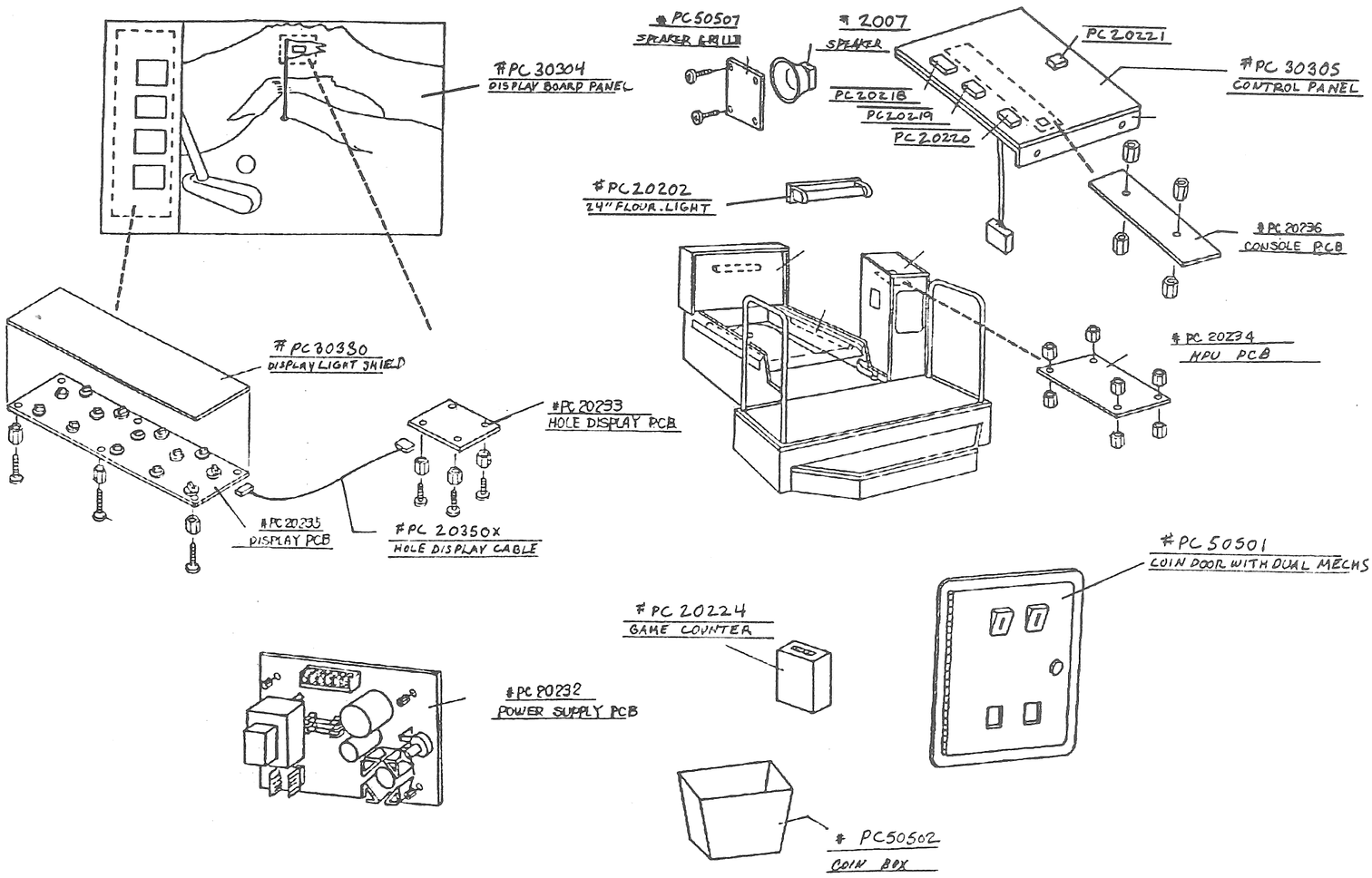
#PC 30304
DISPLAY BOARD PANEL
#PC50507
SPEAKER & GRILL
#2007
SPEAKER
PC20218
PC20219
PC20220
PC20221
#PC 30305
CONTROL PANEL
#PC20202
24" FLOUR. LIGHT
#PC20236
CONSOLE PCB
#PC 20234
MPU PCB
#PC 30330
DISPLAY LIGHT SHIELD
#PC20233
HOLE DISPLAY PCB
#PC20235
DISPLAY PCB
#PC 20350X
HOLE DISPLAY CABLE
#PC 50501
COIN DOOR WITH DUAL MECHS
#PC 20224
GAME COUNTER
#PC 80232
POWER SUPPLY PCB
#PC50502
COIN BOX

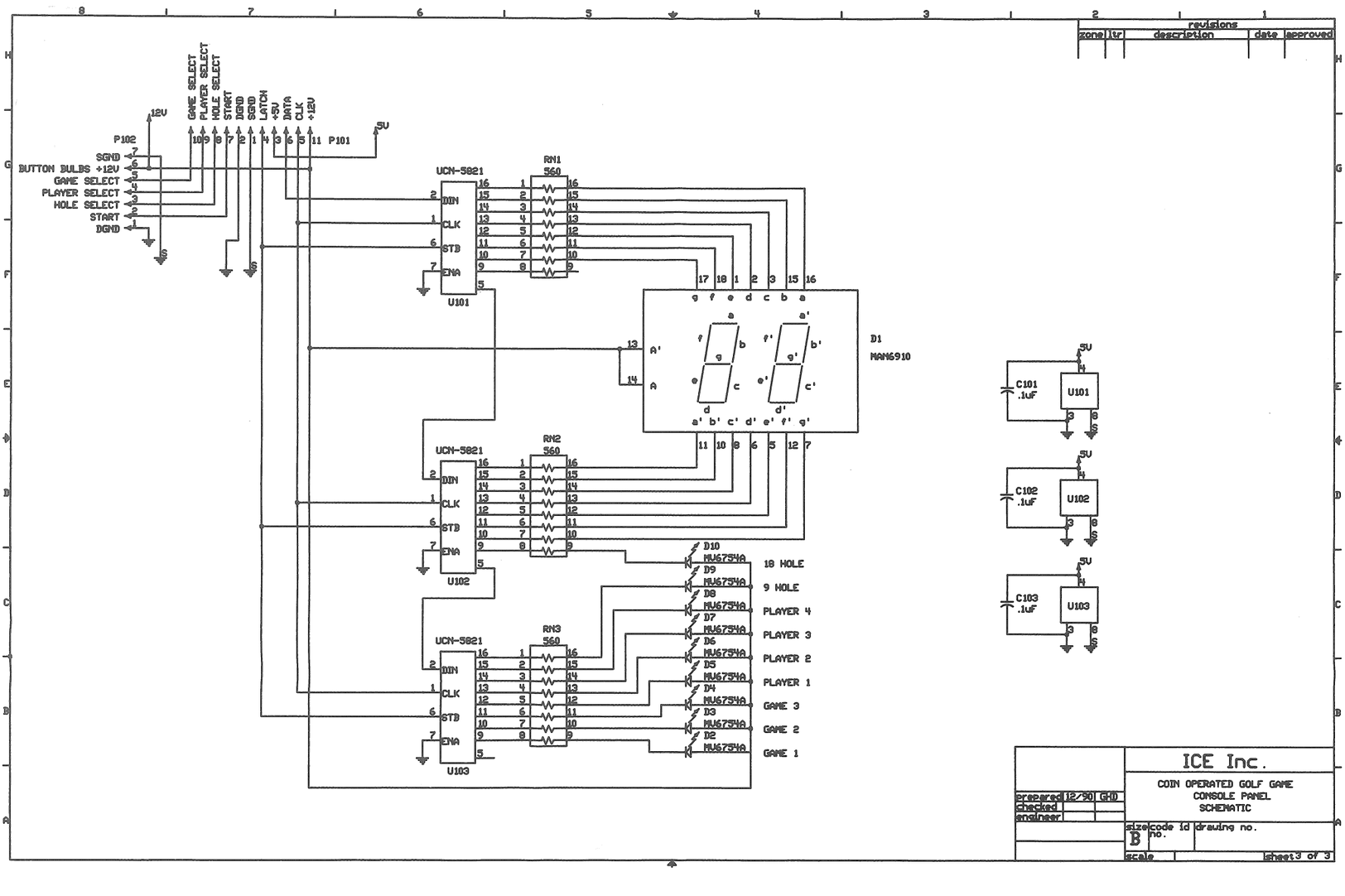
revisions
zone | ltr | description | date | approved
P102
SGND
BUTTON BULBS +12V
GAME SELECT
PLAYER SELECT
HOLE SELECT
START
DGND
12V
5V
P101
GAME SELECT
PLAYER SELECT
HOLE SELECT
START
DGND
SGND
LATCH
DATA
CLK
+12V
UCN-5821
DIN
CLK
STB
ENA
U101
U102
U103
RN1
RN2
RN3
560
D1
MAN6910
MV5754A
D10
D9
D8
D7
D6
D5
D4
D3
D2
10 HOLE
9 HOLE
PLAYER 4
PLAYER 3
PLAYER 2
PLAYER 1
GAME 3
GAME 2
GAME 1
C101
C102
C103
.1uF
ICE Inc.
COIN OPERATED GOLF GAME
CONSOLE PANEL
SCHEMATIC
prepared 12/90 GHD
checked
engineer
size B
code id no.
drawing no.
scale
sheet 3 of 3

| revisions | | | | |
|---|---|---|---|---|
| zone | ltr | description | date | approved |
| | | | | |

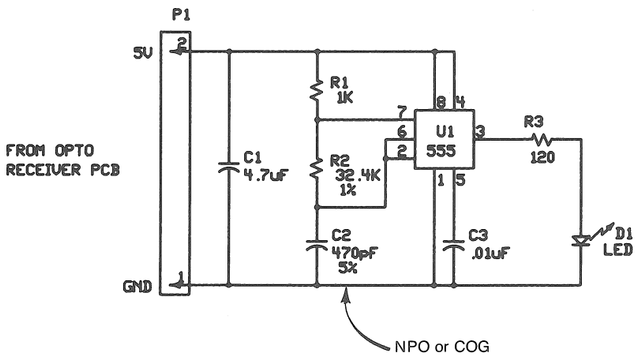


| | | |
|---|---|---|
| prepared | GHD | 11-90 |
| checked | | |
| engineer | | |

ICE Inc.

OPTICAL BALL SENSOR

OPTO TRANSMITTER CIRCUIT

| size | code id no. | drawing no. |
|---|---|---|
| A | | |

scale NA | sheet1 OF 2

SHARP
GP1U52X
Q1
74LS04
U1
R1
470
D1
LED
Q2
7805
5V
16V
SIGNAL
GND
P1
P2
TO OPTO
TRANSMITTER PCB
ICE Inc.
OPTICAL BALL SENSOR
OPTO RECEIVER CIRCUIT
prepared
checked
engineer
GND 11-90
size
A
code
id
drawing no.
scale NA
sheet2 of 2
zone
ltr
description
revisions
date
approved

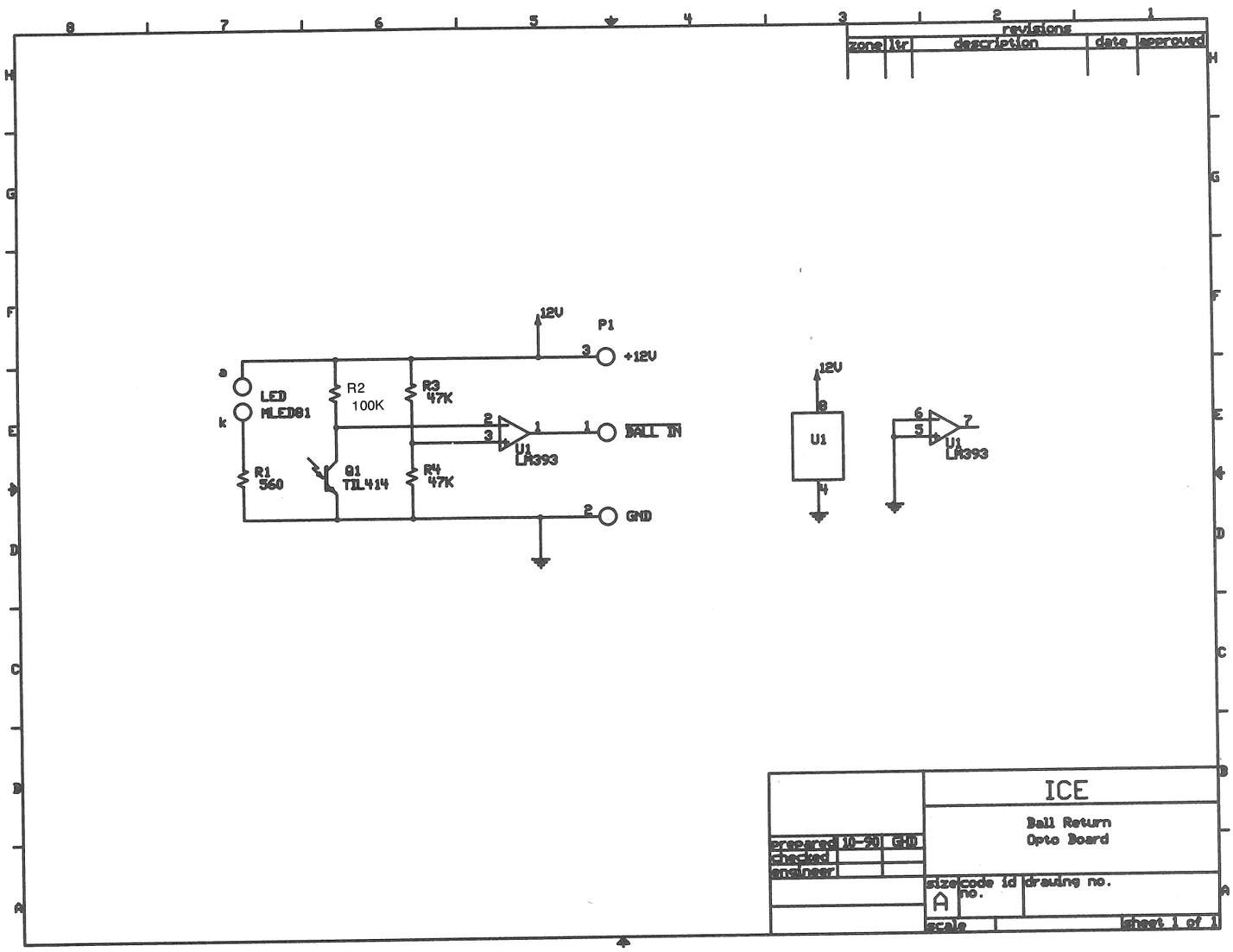
revisions
zone
ltr
description
date
approved
12V
P1
3
+12V
a
k
LED
MLED81
R2
100K
R3
47K
2
3
1
1
BALL IN
U1
LM393
R1
560
Q1
TIL414
R4
47K
2
GND
12V
8
U1
4
6
5
7
U1
LM393
ICE
Ball Return
Opto Board
prepared
10-30
GHD
checked
engineer
size
A
code id no.
drawing no.
scale
sheet 1 of 1

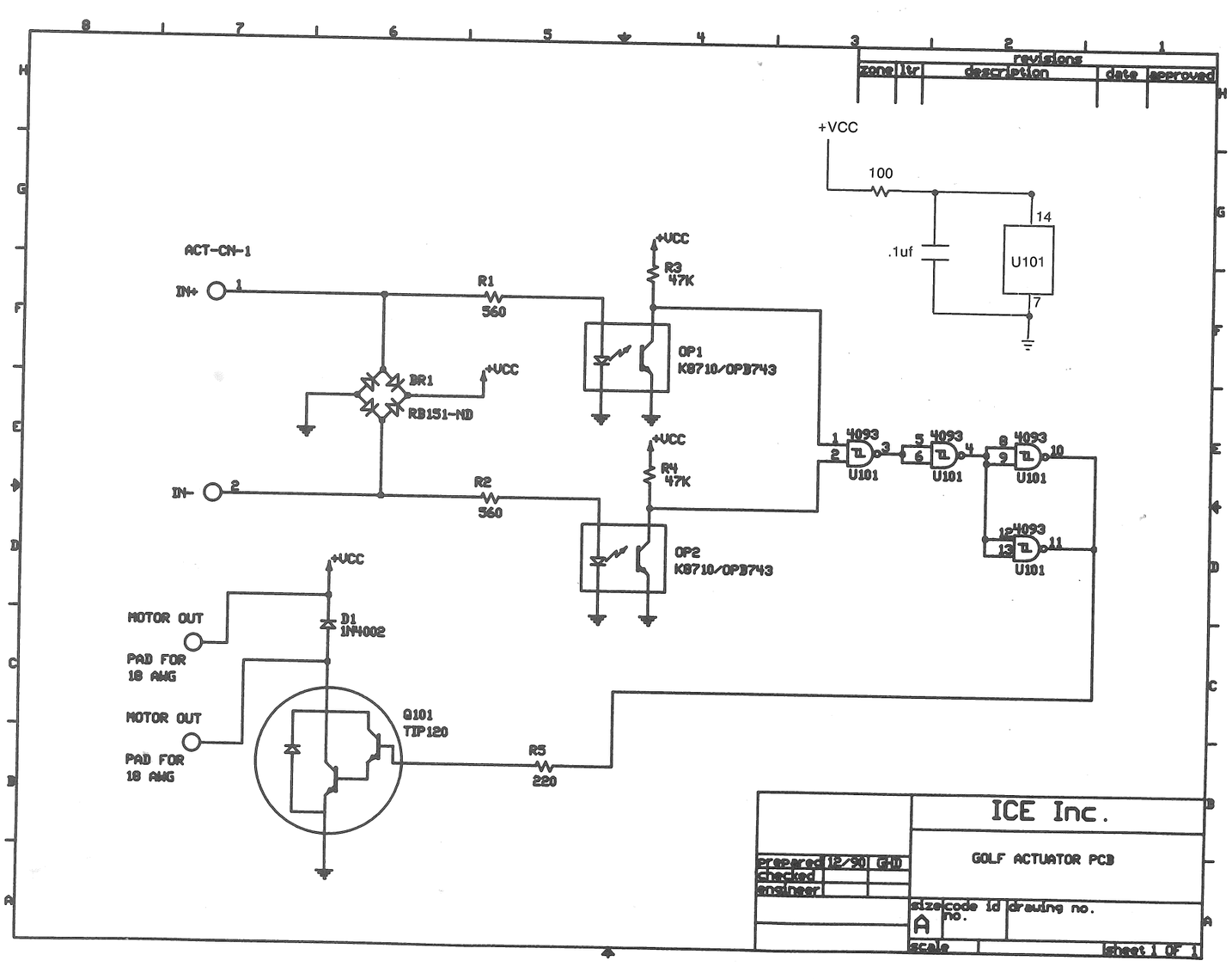
revisions
zone | ltr | description | date | approved
+VCC
100
.1uf
U101
14
7
ACT-CN-1
IN+
1
R1
560
+VCC
R3
47K
OP1
K8710/OPB743
BR1
RB151-ND
+VCC
IN-
2
R2
560
+VCC
R4
47K
OP2
K8710/OPB743
4093
U101
+VCC
D1
IN4002
MOTOR OUT
PAD FOR
18 AWG
MOTOR OUT
PAD FOR
18 AWG
Q101
TIP120
R5
220
ICE Inc.
GOLF ACTUATOR PCB
prepared 12/90 GHD
checked
engineer
size code id no.
A
drawing no.
scale
sheet 1 OF 1

| revisions | | | | |
|---|---|---|---|---|
| zone | ltr | description | date | approved |

P101 SGND LATCH +5V DGND DATA IN CLK +12V NC

P102 SGND LATCH +5V DGND DATA OUT CLK +12V NC

5V

UCN-5821 U101 — RN1 470 — R101 820 — D101 D102 D103 D104 D105 D106 D107 D108 D109 D110 D111 D112 D113 D114 D115 D116 D117 D118 D119 D120 D121 D122 — D100 AND2307SAL

UCN-5821 U201 — RN2 470 — D201 D202 D203 D204 D205 D206 D207 D208 D209 D210 D211 D212 D213 D214 D215 D216 D217 D218 D219 D220 D221 — L201 LAMP — L202 LAMP — D200 AND2307SAL

UCN-5821 U301 — RN3 470 — R301 820 — D301 D302 D303 D304 D305 D306 D307 D308 D309 D310 D311 D312 D313 D314 D315 D316 D317 D318 D319 D320 D321 D322 — D300 AND2307SAL

UCN-5821 U401 — RN4 470 — D401 D402 D403 D404 D405 D406 D407 D408 D409 D410 D411 D412 D413 D414 D415 D416 D417 D418 D419 D420 D421 — L401 LAMP — L402 LAMP — D400 AND2307SAL

UCN-5821 U501 — RN5 470 — R501 820 — D501 D502 D503 D504 D505 D506 D507 D508 D509 D510 D511 D512 D513 D514 D515 D516 D517 D518 D519 D520 D521 D522 — D500 AND2307SAL

UCN-5821 U601 — RN6 470 — D601 D602 D603 D604 D605 D606 D607 D608 D609 D610 D611 D612 D613 D614 D615 D616 D617 D618 D619 D620 D621 — L601 LAMP — L602 LAMP — D600 AND2307SAL

UCN-5821 U701 — RN7 470 — R701 820 — D701 D702 D703 D704 D705 D706 D707 D708 D709 D710 D711 D712 D713 D714 D715 D716 D717 D718 D719 D720 D721 D722 — D700 AND2307SAL

UCN-5821 U801 — RN8 470 — D801 D802 D803 D804 D805 D806 D807 D808 D809 D810 D811 D812 D813 D814 D815 D816 D817 D818 D819 D820 D821 — L801 LAMP — L802 LAMP — D800 AND2307SAL

UCN-5821 U901 — L901 LAMP — L902 LAMP — L903 LAMP — L904 LAMP — L905 LAMP — L906 LAMP

5V — U101 — U201 — U301 — U401 — U501 — U601 — U701 — U801 — U901

| | | |
|---|---|---|
| | ICE Inc. | |
| prepared 12/90 GHD | COIN OPERATED GOLF GAME DISPLAY PANEL SCHEMATIC | |
| checked | | |
| engineer | | |
| | size C | code id no. / drawing no. |
| | scale | sheet 2 of 3 |

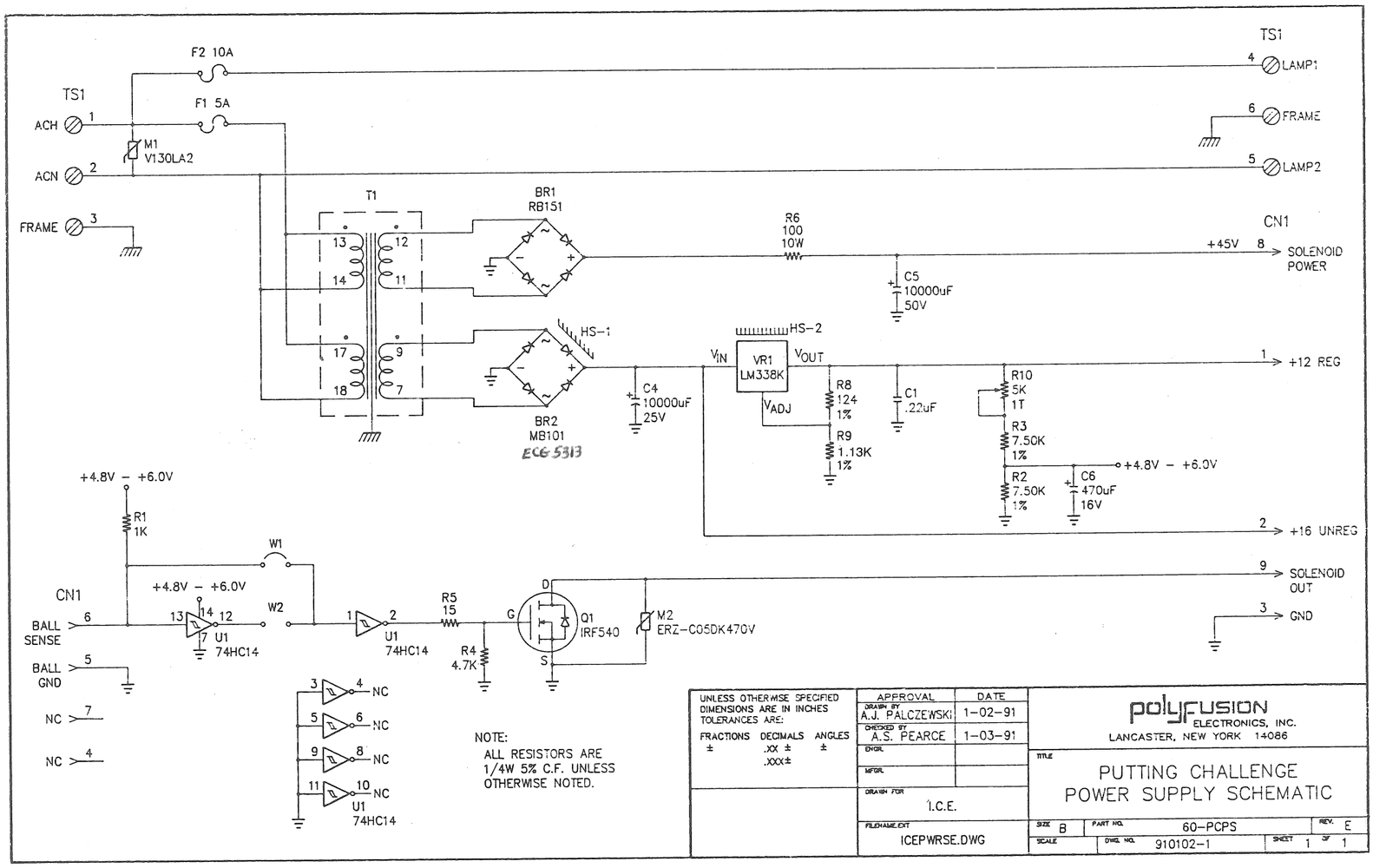
TS1
F2 10A
F1 5A
ACH 1
ACN 2
FRAME 3
M1
V130LA2
T1
BR1
RB151
BR2
MB101
ECG 5313
HS-1
HS-2
R6
100
10W
C5
10000uF
50V
C4
10000uF
25V
VR1
LM338K
VIN
VOUT
VADJ
R8
124
1%
R9
1.13K
1%
C1
.22uF
R10
5K
1T
R3
7.50K
1%
R2
7.50K
1%
C6
470uF
16V
+4.8V – +6.0V
+45V
+12 REG
+16 UNREG
CN1
SOLENOID POWER
SOLENOID OUT
GND
LAMP1
LAMP2
FRAME
R1
1K
W1
W2
BALL SENSE
BALL GND
NC
U1
74HC14
R5
15
R4
4.7K
Q1
IRF540
M2
ERZ-C05DK470V
NOTE:
ALL RESISTORS ARE
1/4W 5% C.F. UNLESS
OTHERWISE NOTED.
UNLESS OTHERWISE SPECIFIED DIMENSIONS ARE IN INCHES
TOLERANCES ARE:
FRACTIONS ± DECIMALS .XX ± .XXX± ANGLES ±
APPROVAL
DATE
DRAWN BY A.J. PALCZEWSKI 1-02-91
CHECKED BY A.S. PEARCE 1-03-91
ENGR.
MFGR.
DRAWN FOR I.C.E.
FILENAME.EXT ICEPWRSE.DWG
polyfusion ELECTRONICS, INC.
LANCASTER, NEW YORK 14086
TITLE
PUTTING CHALLENGE
POWER SUPPLY SCHEMATIC
SIZE B
PART NO. 60-PCPS
REV. E
SCALE
DWG NO. 910102-1
SHEET 1 OF 1

ST DAA 99108 U13

| revisions | | | | |
|---|---|---|---|---|
| zone | ltr | description | date | approved |

P1
NC
EYE
BALL SWITCH
CUP SWITCH
12V
5V 12V 12V SGND DGND DGND DGND DGND

P2
GAME SELECT
PLAYER SELECT
HOLE SELECT
START
5V 12V SGND DGND

P6
12V COIN1 COIN2 DGND SGND
12V BILL
UNUSED DGND SGND TEST

P4
POWER SUPPLY INPUT
12V NC 16V DGND SGND

J1 PROM MASK
J2 PROM MASK
SW1 TEST

DS2223 U1
34064 U2
R1 4.7K
C1 1uF
RES

X2 4mHZ
C28 27pF
X1 4mHZ
C27 27pF

RN5 1K
RN4 1K
RN3 1K
RN1 1K
RN2 1K
C12-23 .1uF

68705U3 U3
RST IRQ1 TMR Vpp XTL EXTL
PA0 PA1 PA2 PA3 PA4 PA5 PA6 PA7
PB0 PB1 PB2 PB3 PB4 PB5 PB6 PB7
PC0 PC1 PC2 PC3 PC4 PC5 PC6 PC7
PD0 PD1 PD2 PD3 PD4 PD5 PD6 PD7

R3 10K
R4 10K
R8 390
R9 560
GAME CPU STATUS LED D1
SOUND CPU STATUS LED D2

C5 .01uF
C8 1uF

68705U3 U4
27512 U5

SGS L298 U16
SGS L298 U17
SGS L298 U18
UDN-2998 U8
UDN-2998 U9
UDN-2998 U10
LS04 U11
LS04 U12
2003 U13
LS04 U14
LS04 U15

P5
MOTOR A
MOTOR B
MOTOR C
MOTOR D
MOTOR E
SHAKER MOTOR

D3 1N4004
D4 1N4004

P1
DATA CLK LATCH — DIGIT DISPLAYS

P2
DATA CLK LATCH — CONSOLE DISPLAYS

P6
16V DISPENSE TICKET
DGND
SGND

P4
DELIVER BALL

12V CREDIT COUNTER OUTPUT
NC

SPEAKER
GND

LM358 U6
C10 .01uF
RN10 10K
C9 .01uF
C11 .001uF
R10 10K
VR1 5K VOLUME
C24 10uF
TDA2002 U7
C25 470uF
C26 1000uF
R7 220 1/2 WATT
R6 2.2

RN6 RN7 RN8 RN9 6.8K 3.3K

Q1 5V REG 7805
C2 1000uF
C29 100uF

B1 3V
C3 1uF
C4 1uF
C6 1uF
C7 1uF

NOTE: All Resistors are 5% 1/4 watt unless otherwise noted

| REV 3 | ICE Inc. |
|---|---|
| prepared 12/90 GHD | COIN OPERATED GOLF GAME |
| checked | MAIN LOGIC SCHEMATIC |
| engineer | size C code id no. drawing no. |
| | scale sheet 1 of 3 |

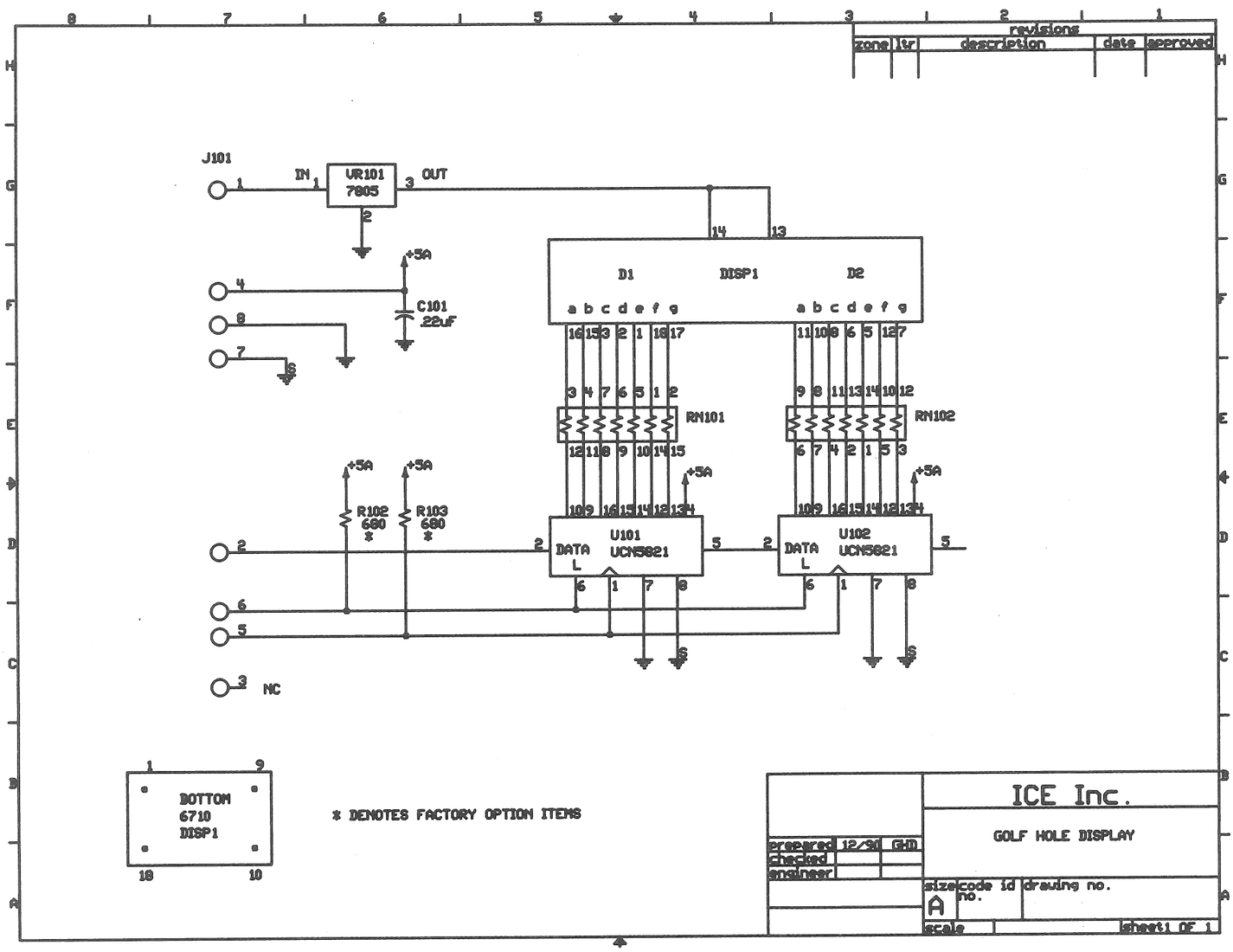
revisions
zone | ltr | description | date | approved
J101
VR101
7805
IN
OUT
+5A
C101
.22uF
D1
DISP1
D2
a b c d e f g
RN101
RN102
R102
680
*
R103
680
*
U101
UCN5821
U102
UCN5821
DATA
L
NC
BOTTOM
6710
DISP1
* DENOTES FACTORY OPTION ITEMS
ICE Inc.
GOLF HOLE DISPLAY
prepared 12/90 GHD
checked
engineer
size A
code id no.
drawing no.
scale
sheet1 OF 1

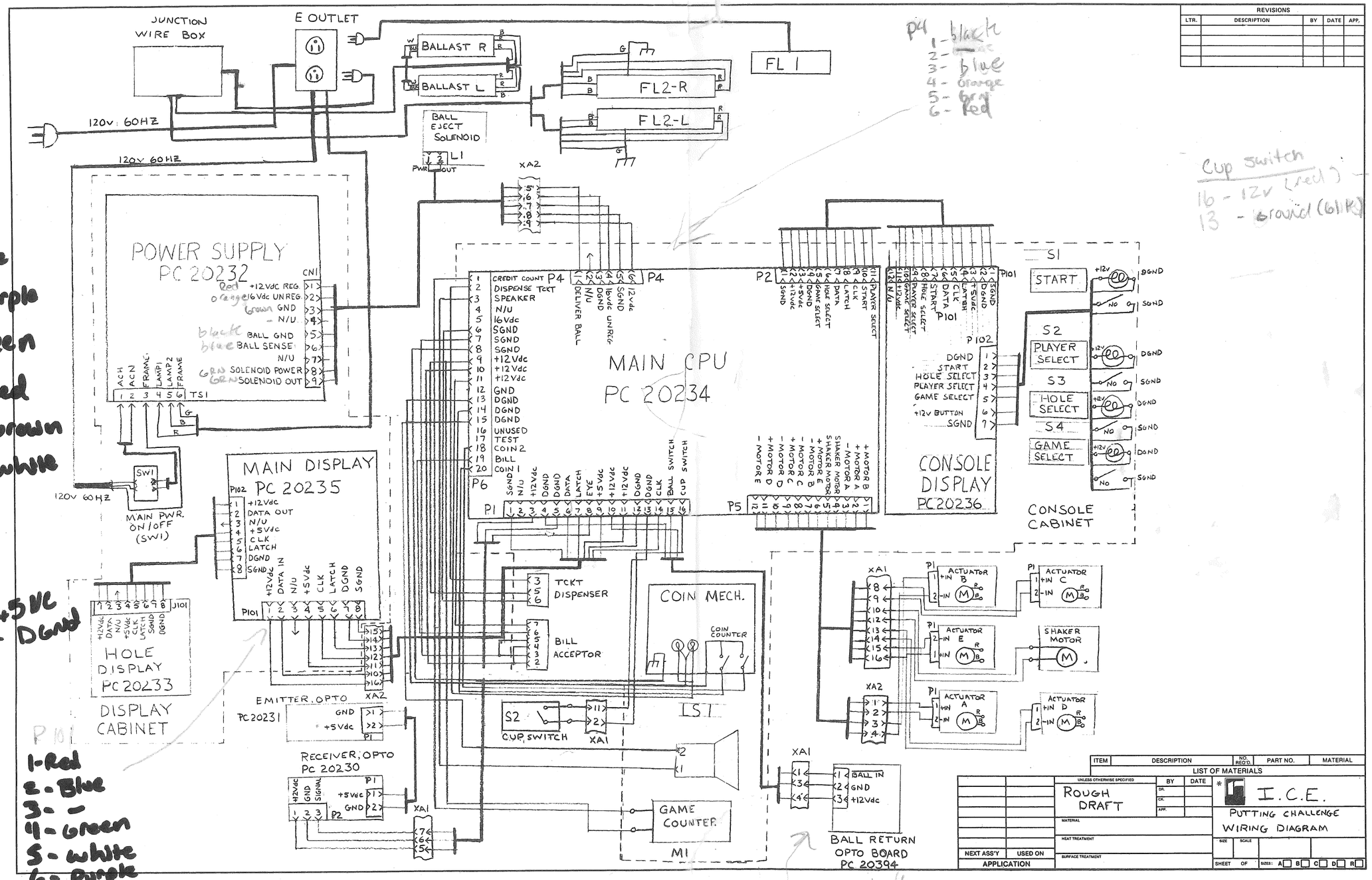


P4
1 - black
2 - [illegible]
3 - blue
4 - orange
5 - grn
6 - red

Cup switch
16 - 12v (red) - N
13 - ground (blk)

MCP MD
1 blk - 8 blk
6 blue - 2 blue
7 purp - 6 purple
9 white & Green
11 white - 1 Red
12 black - 7 brown
14 Red - 5 white

1 16 Green - +5 VC
2 13 - Brown - DGND

1 - Black
6 - Blue
7 - purple
11 - white
12 - Black
14 - Red
9 - white

1 - Red
2 - Blue
3 - -
4 - Green
5 - white
6 - purple
7 - Brown
8 - Black

14 clk -> red reads 12v
16 Grn -> reads 5v

"Ball" switch @ eject solinoid

p101

1 12v - Red ✓
2 data 2v - Blue ?
3 N/A - -
4 5v - Green ✓
5 clk - white ?
6 Latch - purple ?
7 Dgnd - Brown
8 Sgnd - Black

↓

From P1

1-Sgnd - blk
6-data - blue
7 latch - purple
11 - 12v - white
12 - Dgnd - blk
14 - clk - Red
9 - 5v - white

↓

Have from P1

1-blk - Sgnd - 1 (P101)
6 - blue - data - 6 (P101)
7 - purple - latch - 7 (P101)
11 - white - .32
13 - brown - Gnd - Gnd 7 (P101
7825-985
14 - Red - 12v
16 - Green - 5v - 4 5v (P101)

E991-985/

P1

1 Sgnd - blk
2 - -
3 - 12v wh
4 gnd baby blue
5 gnd blk
6 .25 blue
7 .62 purple
8 - 5v orange
9 - 5v white/gray
10 - 5v green/gray
11 - .32 white/gray
12 - Gnd blk
13 - Gnd brown
14 . 12v red
15 - 12v pink
16 - 5v green

P1

1 Sgnd
2 N/A
3 12v
4 dgnd
5 dgnd
6 - data
7 - Latch
8 - eye
9 5v
10 12v
11 12v
12 dgnd
13 dgnd
14 - clk
15 bell switch
16 cup switch

6, 7, 14 > come from U3 (chip) 6 = 25 PB0, 7 = 26 PB1, 14 = 27 PB2 > LS04 - U11